The Multi-Dimensionality of Trustworthiness of Banks Midst a Confidence Crisis: The Case of Retail Banks in Zimbabwe

By

MATILDAH ZUNGUNDE

Submitted in accordance with the requirements for the degree of

DOCTOR OF BUSINESS LEADERSHIP

at the

UNIVERSITY OF SOUTH AFRICA

SUPERVISOR: PROFESSOR FRANCOIS DU TOIT

FEBRUARY 2018

ABSTRACT

The strategic importance of a well-established banking sector in an economy and the pivotal role trust plays in this sector is well-documented in banking literature. Given this accepted importance of trust, it is surprising that some banks are still exhibiting more signals of distrust than of trust as expected, shattering consumer trust and confidence in the process. In response, governments, through their central banks, occasionally resort to implementing policies that focus heavily on regulation and control. These interventions are usually designed to restore consumer confidence in the banks' future behaviours as well as providing assurance that exchanges taking place within a banking sector are safe and secure. Surprisingly, consumer trust and confidence are still elusive in some banking sectors, despite all these measures.

This mixed-methods, sequential explanatory study explores the concept of trustworthiness by investigating trustworthiness dimensions of banks that drive consumer trust in the Zimbabwean banking sector that is experiencing low trust and confidence levels. To fulfil the objectives of this study, a quantitative research approach (survey) was first employed to explore bank customers' trustworthiness perceptions on a sample of 400 customers. A qualitative research approach (semi-structured interviews), was then employed to gain a better understanding and clarification of the survey findings. Structural Equation Modeling (SEM) was applied to determine the statistical model that sought to explain the relationship among the variables. Hypotheses were then tested between model constructs to determine their influence on one another.

Study findings revealed that shared values, structural assurance and integrity (consistency) are the trustworthiness determinants with the highest positive influence on bank trustworthiness. A negative relationship was found between communication and bank trustworthiness. Competence was found to have an insignificant correlation with trustworthiness. Additionally, both behavioural intentions and affective commitment (relational outcomes) were found to positively influence bank trustworthiness. This study has brought to light how trustworthiness of banks is perceived in a banking sector that is not only experiencing a confidence crisis but also in a country that is experiencing an uncertain economic and political environment within an African banking context. The final model presented in this study can be applied in trustworthiness studies in the financial services sectors, particularly in sectors that are operating in similar uncertain environments.

In order to reignite consumer confidence in the banking sector, the RBZ is advised to set tighter corporate governance measures that can put a stop to activities such as insider lending that end up defrauding depositors within the banks. It is also imperative that departments such as Treasury, Risk and Credit within the RBZ and in banks are managed by competent personnel who adhere to the prudential standards of banking. Bank custodians are advised to continuously exhibit trustworthiness behaviours because customers' trust and confidence can only be restored if there is evidence of sincere behaviours that are regarded as reflecting a trustworthy image. Planning for peak periods in terms of cash and personnel, to avoid prolonged queues and cash shortages that have become an everyday occurrence in the Zimbabwean banking sector is one way banks can improve trust and confidence. Banks should also consider providing services such as financial hardship advisory services and extended loan repayment options that can go a long way in not only assisting their customers to manage their debts, but also to show that banks are taking into consideration their customers' current challenges and needs.

Key stakeholders in the banking sector are also encouraged to share information on key developments integral to the smooth functioning of the banking sector. This information should then be disseminated to the banking public in a unified voice to avoid distortion of information that leads to financial anxiety and further erosion of trust. In the absence of formal timeous communication, bank customers may resort to relying on the grapevine and engage in speculative behaviours which can be very destructive and difficult to correct.

Key Terms: *Antecedents of trust; Behavioural intentions; Banking sector; Commitment; Reserve Bank of Zimbabwe; Structural assurance; Trust; Trustworthiness; Zimbabwean banking sector.*

DECLARATION

Name---------- Matildah Zungunde

Student Number----------78838444

Degree---------- Doctor of Business Leadership

I declare that ***"The Multi Dimensionality of Trustworthiness of Banks Midst a Confidence Crisis: The case of Retail Banks in Zimbabwe"*** is my own work and that all the sources that I have used or quoted have been indicated and acknowledged by means of complete references.

SIGNATURE: …… **DATE:** 28 February 2018

ACKNOWLEDGEMENTS

Embarking on this important academic journey in my life would not have been possible without the inspiration and support from everyone who worked alongside me throughout this journey. I sincerely acknowledge and thank the following people:

- My late father Joseph Isaac Kanyekanye to whom this thesis is dedicated. Thank you for the inspiration and for all the valuable lessons that I continue to cherish to this day. You nurtured all of us, your children, to believe in the merits of education and to always challenge and believe in ourselves.

- My mother, words alone can never describe the strong supportive mother you are; you effortlessly took the roles of both a father and mother and to this day, you continue to bring the best in me.

- I would also want to extend my sincere gratitude to the entire SBL academic team particularly to my supervisor, Professor Du Toit. Your patience and encouraging attitude has moulded me academically and inspired me to complete this thesis. To Ms T. Seopa (programme administrator), thank you, your assistance and dedication did not go unnoticed.

- A special thank you to Ms Suwisa Muchengetwa (Statistician – UNISA Department of Statistics) for her guidance with the statistical analysis, without her guidance, this thesis would not have had the desired substance.

- To my husband, Andrew Zungunde, thank you for your unwavering support, and to my sons, Andrew Jr, Sean and James, thank you for being my study mates and walking this journey with me.

- To my brothers, Dr Joseph Kanyekanye and Pr Eng. Celestino Kanyekanye, thank you for leading by example; your love and accomplishments will always be a source of inspiration in my life. Collectively, we have indeed made our father's dream come to life.

TABLE OF CONTENTS

LIST OF TABLES

LIST OF FIGURES

LIST OF ACRONYMS AND ABBREVIATIONS

AGFI	Adjusted Goodness of Fit Index
AMOS	Analysis of moment structures
ANOVA	Analysis of variance
ATM	Automated Teller Machine
CABS	Central Africa Building Society
CCZ	Consumer Council of Zimbabwe
CFA	Confirmatory Factor Analysis
CFI	Comparative Fit Index
CMIN/DF	Chi square Minimum Discrepancies
CR	Critical ratios
DBL	Doctor of Business Leadership
DTM	Decision to Trust Model
ESAP	Economic Structural Adjustment Programme
FBC	First Banking Corporation
FTSE	Financial Times Stock Exchange
GFI	Goodness of Fit Index
IFI	Incremental Fit Index
IIMA	Institute for International Monetary Affairs
IMF	International Momentary Fund
IS	Information Systems
KMO	Kaiser-Meyer-Olkin
KMV	Key Mediating Variables
MLE	Maximum likelihood estimation
MSV	Maximum of shared variance
NFI	Normed Fit Index
NSSA	National Social Security Authority
RBZ	Reserve Bank of Zimbabwe
RM	Relationship Marketing
RMSEA	Root Mean Square error of approximation
RNI	Relative Non-centrally Index
SBL	School of business leadership
SEM	Structural equation modeling
SICs	Squared Inter-construct correlations
SPSS	Statistical Package for Social Sciences
SSA	Sub-Saharan Africa
TBRF	Troubled Bank Resolution Framework
TLI	Tucker Lewis Index
UNCTAD	United Nations Conference on Trade and Development
UNISA	University of South Africa
US	United States
VIF	Variance Inflation Factor
WOM	Word of Mouth
ZABG	Zimbabwe Allied Banking Group
ZIBAWU	Zimbabwe Banks and Allied Workers Union

CHAPTER 1: INTRODUCTION

1.1 BACKGROUND TO THE STUDY

Consumer trust and confidence are widely regarded as anchors of a stable and competitive economy. Trust influences relationships between parties in an economic system as it is based on the conviction that the other person or organisation will act in good faith and to the mutual benefit of all parties by delivering on their promises efficiently and with integrity (Gundlach and Cannon, 2010; Shim, Serido and Tang, 2013). Mayer, Davis and Schoorman (1995:712) define trust as "the willingness of a party to be vulnerable to the actions of another party based on the expectation that the other will perform a particular action important to the trustor, irrespective of the ability to monitor or control that other party". From a financial services perspective, consumer confidence is described as "the level of certainty towards outcome of purchase of financial services or products implying different inherent risks" (Howcroft, Hamilton and Hewer, 2007:482).This implies that confidence in an economy helps all stakeholders to make future plans as confidence is based on a conviction that favourable economic trends will continue to emerge. Trust involves confidence and vice versa, thus both constructs are conceptually linked and depended on each other as higher levels of trust are mostly associated with a higher levels of general confidence (De Jonge, Van Trijp, Van der Lans, Renes and Frewer, 2008b). Roberts-Lombard (2012:3805) reinforces the relationship between trust and confidence by stating that "where trust is focused, there is a generalised sense of confidence and security in the other party".

The strategic importance of a well-established banking sector in an economy and the pivotal role trust plays in this sector is well-documented in the banking literature (Gillespie and Hurley, 2013; Edelman, 2013). Similarly, trusting the banking system is central to industrial growth and development, and when trust in the institutional structure of the financial system deteriorates, the entire economy is at stake (Bülbül, 2013). Thus, a banking sector is an important part of any economy as it is integral to the wellbeing of an economy (Beck, Demirguc-Kunt and Martinez Peria, 2005). Levine (2003) also argued that a well-developed and sound financial system contributes to the economic development of a country significantly, because of the important role financial organisations play in bridging the imbalance between savings and investment needs within an economy.

Trust, in the form of confidence in a partner's reliability and integrity, plays a very important role in relationships between banks and their customers, particularly long-term relationships, since not all aspects can be determined by a contract (Camén, Gottfridsson and Rundh, 2011).

Hurley, Gong and Waqar (2014) further argue that trustworthy banks are pivotal to social and economic progress such that an unstable banking sector can jeopardise the long-term sustainability of an economy and can potentially trigger a financial crisis resulting in an economic crisis. While the behaviour of financial institutions cannot be predicted with certainty, the belief and expectations among many consumers are that financial institutions will not engage in opportunistic behaviours that disadvantage the consumer even if the opportunity presents itself (Nooteboom, 2002). According to Nienaber, Hofeditz and Searle (2014:370), organisational trust involves "vulnerabilities, dependencies and risks that arise from interpersonal trust", the collective trust is regarded as "an individual's expectation that some organised system will act with predictability and goodwill" (Maguire and Phillips, 2008:372).

Unquestionably, the 21st century consumer has unparalleled access to information mainly due to technological advancement which has expedited consumer expectations of better products and services in the process. As a result, organisations, banks included, are operating under extreme pressure of trying to fully understand their customers' needs and preferences in an effort to identify and implement strategies that can successfully meet these needs (Roy, Eshghi and Shekhar, 2011). Sekhon, Roy, Shergill and Pritchard (2013:76) argue that "Trust has been identified as an important component of both relationship development and maintenance, especially in the context of consumer relationships in the service sector". Similarly, Berry (1995) argues that trust is a powerful relationship marketing tool that organisations can utilise to foster enduring relationships with their customers. In addition, a service provider's ability to establish a long-term relationship with customers can be regarded as a source of a competitive advantage in today's turbulent banking sector (Siu, Zhang, Dong and Kwan, 2013).

However, financial organisations often face a challenge of creating a perception of trust in the eyes of the consumers which was exacerbated by the 2008 global financial crisis that resulted in the deterioration of trust in many financial institutions including banking sectors across many nations (Bülbül, 2013; Hurley *et al.*, 2014; Järvinen, 2014). Low levels of trust increase vulnerability, jeopardise investments, and slow down economic growth (Armstrong, 2012). In the aftermath of the 2008 financial crisis, trust in the banking sector deteriorated drastically such that, banks and other financial services have become the least trusted industry by a large margin (Edelman, 2015). Thus, it should not come as a surprise that more than fifty percent of bank customers in the United States value a relationship anchored on trust with their banks more than they value getting the highest momentary gains on their investments (Nienaber *et al.,* 2014). Conversely, the financial crisis also certainly alerted many financial institutions to the pivotal role trust plays particularly in the banking sector (Shim, Serido and Tang, 2013).

It is, therefore, imperative for financial institutions like banks to acknowledge the significant role that trust plays in influencing relationships with their customers as well as understanding determinants of trustworthy relationships (Kharouf and Sekhon, 2009). After all, organisational trust has been shown to minimise uncertainty and boost confidence between parties in a business relationship (Anderson and Narus, 1990).

In Zimbabwe, the political turmoil and the resultant economic challenges experienced over the past decade have affected the banking sector and its relationship with customers; the majority of bank customers, it would appear, are apprehensive over the banking system. The country has experienced many bank closures and persistent cash shortages, among many other challenges, resulting in the deterioration of trust across the banking sector (Mataranyika, 2015). The effects of the bank failures on bank consumers were best explained by Dhliwayo (2015:11), the then Deputy Governor of the Reserve Bank of Zimbabwe, when she stated that:

> Bank failures are not merely a change in the architecture of the sector, they represent lost savings, lost pension funds and the inability to pay for school fees and other basic necessities for the common man on the street. As a result of the bank failures we have faced, the banking public endured tremendous psychological, emotional, social and financial trauma.

More recently, cash shortages in the Zimbabwean banking sector led to the RBZ introducing bond notes in an effort to mitigate the liquidity challenges (Worton, 2017). A bond note is a form of a bank note issued by the RBZ that is not considered as a currency but rather as a legal tender pegged equally against the U.S. dollar (RBZ, 2016). However, the introduction of bond notes failed to solve the cash challenges. Instead, the move caused a lot of anxiety in the market as people fear a return to the Zimbabwean dollar era in which hyperinflation wiped out savings, pensions and incomes, reducing citizens to poverty status (Worton, 2017). Despite consented efforts by the RBZ to instil confidence, the Zimbabwean banking sector is still marred by low levels of trust and confidence (Sandada and Magobeya, 2016). In light of such threats and challenges, banks that want to remain competitive and relevant must understand the current critical customer value drivers in such an environment and transform their business models into customer-centric institutions that embrace the important role that trustworthiness plays in restoring consumer trust and confidence.

Based on the importance of trust in the financial services industry as highlighted in the discussions above, it suffices to conclude that there is a convincing argument for the need to better understand organisational trust and the significance of trustworthiness of a service provider in this context. This study, therefore, explores organisational trust from the

consumer's perspective and reflects consumers' perceptions on the various organisational trustworthiness dimensions. It seeks to uncover the underlying dimensions of trustworthiness of banks that help to influence consumer trust in a banking environment experiencing low trust levels as well as an uncertain economic and a volatile political environment.

Dietz and Den Hartog (2006) recommends that, a holistic measure of trust should focus on both the respondents' trust beliefs as well as their intended actions based on their trust beliefs because, simply identifying that an organisation's customers perceive it as being trustworthy does not automatically mean that the customers will act on their trustworthy beliefs (Gillespie, 2012). Thus, this study also investigates how bank customers' trustworthiness beliefs influence their commitment and behavioural intentions towards banks. Commitment is defined as "a desire to develop a stable relationship, a willingness to make short-term sacrifices to maintain the relationship, a confidence in the stability of the relationship, and investments in the relationship" (Anderson and Weitz, 1992:19). Delivering on promises made facilitates the development of trust, which leads to commitment, which in turn provides motivation for cooperation as a way of preserving the relationship investments (Roberts-Lombard, 2012). Behavioural intentions are regarded as good indicators of a consumer's intention to develop a lasting relationship with a service provider (Wilson, Zeithaml, Bitner and Gremler, 2012).

1.2 CONTEXTUAL SETTING

Relationships emanating from the banking sector between bank customers and bank custodians provide an unambiguous empirical context in which a researcher can explore the concept of consumer trust and outcomes of trust (Saparito, Chen and Sapienza, 2004). Thus, this study is set in the Zimbabwean banking sector that is currently experiencing a confidence crisis. Below is a brief outlook of the Sub-Saharan banking sector in which Zimbabwe as a country falls. Thereafter, an overview of the Zimbabwean banking sector is provided.

1.2.1 An Overview of the Sub-Saharan Africa Banking Sector

Financial stability is crucial for the efficient functioning of the financial system, and the banking sector constitutes the largest part of the financial system in most African countries (Mlachila, Park and Yabara, 2013). According to the International Monetary Fund (IMF), (2012), financial sectors in most of SSA's low-income countries are generally underdeveloped, and this has the effect of reducing the banking industry's contribution to the economic growth of an economy. The economic value placed on banking systems in SSA countries differs significantly. This could be attributed to differences in policies, population density, economic size, prevailing legal statutes and dependence on resources (Mlachila *et al.,* 2013).

The majority of the population in the SSA region is under-banked as the banking systems are mostly characterised by poor outreach in terms of the provision of financial services to the population (Mlachila *et al.,* 2013). According to The European Investment Bank (EIB) (2015), financial inclusion in SSA is rated the lowest in the world with only 34% of adults having access to a bank account in 2014. Most of the SSA banking sectors are relatively small and comprise of a significant number of foreign-owned banks, which managed to penetrate the banking system after the reform programmes that took place in the 1980s and 1990s and resulted in the restructuring of the banking systems and privatisation of state-owned banks (Mlachila *et al.,* 2013). The reform programmes enabled banks to boost their capital bases and make improvements to their risk management activities (Mlambo, Kasekende and Murinde, 2012). SSA banking systems have different features as a result of a confluence of factors that include low income levels, significant informal sector, high levels of financial illiteracy small absolute size of banks and banking systems; poor structural assurance; lack of trust in the banking system, political risk and poor creditor rights, and regulatory enforcement mechanisms (Andrianaivo and Yartey, 2009; Beck, Maimbo, Faye and Triki, 2011).

Levels of financial development within the SSA have remained significantly lower than other developing regions in the world (Mlachila *et al.,* 2013. SSA typically scored lowest among the world's developing sub-regions on financial development issues that include efficiency and depth of financial institutions (Čihák *et al.*, 2012). The impact of financial sector reforms on banking in SSA countries has not been consistent. Some economies have progressed well whereas others have made insignificant progress in implementing financial reforms within their banking sectors (Mohamed, 2007). Berger and Humphrey (1997) argue that studies pertaining to productivity and efficiency within banks are lagging behind financial changes that have taken place, especially in SSA.

The limited integration with the global market assisted most of the SSA countries to weather the adverse effects of the global financial markets. "Systemic financial stress was recorded only in Nigeria, where the flight of foreign portfolio capital contributed to the collapse of a stock market bubble that had been fuelled, in good part, by margin lending by banks to equity investors" (Mlachila *et al.,* 2013:16). In addition, fraudulent activities, with mismanagement and poor internal control measures also attributed to the challenges faced by Nigerian banks. Consequently, these factors also adversely affected the levels of trust and confidence in the Nigerian banking sector. In an effort to mitigate these challenges, the Central Bank of Nigeria intervened by taking over ten banks that collectively accounted for a third of banking system assets, and had experienced huge losses on their loan portfolios (Mlachila *et al.,* 2013).

According to Price Waterhouse Coopers [PWC], (2014), the top risks affecting banks globally are regulation and political interferences respectively. This can be a true reflection of SSA banking sectors where political interferences sometimes negatively affect the economic outlook of a country. For instance, the financial turmoil experienced in Nigeria in 2009 highlighted above, is a good reflection of how government weaknesses and interferences in macro financial developments can result in a serious banking system crisis which can negatively impact on the economic development of a country (Mlachila *et al.,* 2013). According to the World Investment Report (2015), many African countries are negatively affected by political interferences in their banking operations. In addition, bank supervision is generally poor in many SSA countries, a reflection of under-resourced supervision activities as well as inadequate regulatory policies (EIB, 2015).

For policymakers, the changes occurring within the context of the African banking sector require some consideration. There is a need for improvements in regulatory mechanisms and market infrastructure as well as more robust crisis prevention and resolution mechanisms (Mlachila *et al.,* 2013). For researchers, the persistent poor performance of some SSA banking sectors, despite financial reforms that have taken place, is a clear indication of the need for more studies focused on banking sectors in SSA economies that can potentially assist in policy development aimed at improving the sector as well as studies that focus on restoring confidence and trust in these banking sectors. This follows Opoku and Arkoli's (2009) argument that there is a dearth of studies on consumer behaviour in developing countries, especially in the SSA. This could be because the majority of studies focus on developed and industrialised countries, while only a few studies pay attention to activities taking place in developing countries.

1.2.2 An Overview of the Banking Sector in Zimbabwe

After gaining independence in 1980, Zimbabwe's financial sector was generally stable. The RBZ's mandate was and primarily remains the regulation and supervision of the banking sector which is currently composed of 19 financial institutions. In 1991, the Government of Zimbabwe embarked on an Economic and Structural Adjustment Programme (ESAP) and one of the key objectives of ESAP involved implementing financial reforms through liberalisation and deregulation of the financial sector (Makoni, 2010). The government and the RBZ justified the implementation of these financial reforms as a way of bringing innovation and efficiency to the banking system as the oligopolistic nature of the banking sector was regarded as a deterrent to competition among the players, robbed the banking consumers of broad choices,

and created a restricted quality of bank services (Makoni, 2010). Consequently, the RBZ implemented the financial reforms through legislation and deregulation.

After the deregulation of the banking sector and during the period 1993 – 2003, the banking sector in Zimbabwe experienced phenomenal growth when the Registrar of Banks, in consultation with the RBZ, issued a significant number of new banking licences (Mumvuma, 2002). This resulted in the emergence of new indigenous banks, notably United Merchant Bank, Royal Bank, Trust Bank, Time Bank and Barbican Bank, but no new foreign-owned banks were licensed during that period (Muranda, 2006). The number of banks, therefore, increased to 41 by 2004 from 19 in 1992 as presented in Table 1.1 below.

Table 1.1: Financial sector growth patterns in Zimbabwe: 1992 – 2004

Type of Institution	1992	2002	2003	2004	Growth %
Commercial Banks	5	15	17	16	220
Merchant Banks	4	6	6	6	50
Finance Houses	4	7	7	5	25
Discount Houses	3	7	8	9	200
Building Societies	3	5	5	5	66.67
Total (Sector-wide growth)	**19**	**40**	**43**	**41**	**115.8**

Source: Muranda (2006).

The high growth trend prompted the banking sector to experience several other challenges which ranged from poor corporate governance, low levels of capitalisation, inadequate risk management practices and regulatory arbitrage, among others, and resulted in the collapse of some banks (Mumvuma, 2002). In 1995, there were signs of distress in the banking sector and it was evident that six banks (CBZ, Zimbank, Zimbabwe Building Society, United Merchant Bank, First National Bank and Universal Merchant Bank) were insolvent (Mandizvidza, 2011). In response to this negative state of affairs in the banking sector which threatened to cause a lot of financial anxiety and distress among the banking public, the Zimbabwean government bailed out three of the troubled financial institutions (CBZ, Zimbank and Zimbabwe Building Society) (Mandizvidza, 2011).

Unfortunately, some banks continued to experience challenges and were eventually closed. The United Merchant Bank was the first bank to be liquidated in 1998, and Universal Merchant Bank followed in 2000 (Kupakuwana, 2012). In 2004, a significant number of banking institutions experienced challenges resulting in ten being placed under curatorship, while two were in liquidation and one discount house was closed (Dhliwayo, 2015). The affected

financial institutions included Barbican Bank Limited, Trust Bank Corporation, Royal Bank Zimbabwe Limited, Time Bank of Zimbabwe, CFX Bank Limited, Century Discount house Rapid, Discount House, Intermarket Banking Corporation, Intermarket Building Society and National Discount House (Dzomira, 2014). In the wake of these developments, bank customers of these institutions were adversely affected as the liquidation of banks in terms of the provisions of the Companies Act of Zimbabwe was time-consuming and did not prioritise settlement of claims from depositors (Mandizvidza, 2011). According to the RBZ, the challenges in these financial institutions were mainly caused by mismatches between assets and liabilities, rampant abuse of power within corporate structures, non-performing loans and unwarranted risk-taking activities that resulted in overexpansion that was not supported by adequate risk management systems (RBZ, 2005).

The bank failures led to the promulgation of the Financial Laws Amendment Act of 2004 which transferred the powers of the Registrar of Banks from the Ministry of Finance to the Central Bank. This also meant that the licensing of new banks was now the responsibility of the central bank, (RBZ, 2004). As a way to circumvent some of the issues affecting the financial sector, the national banking regulator formed the Zimbabwe Allied Banking Group (ZABG) by merging Barbican Bank, Royal Bank and Trust Bank in 2004 (RBZ, 2004). The RBZ also introduced new guidelines to strengthen banking supervision and surveillance Guideline No .02-2004/BSD focused on enhancing corporate governance and Guideline No .01-2004/BSD, which provided guidelines on Minimum Internal Audit Standards in Banking Institutions (Dzomira, 2014). In addition, the RBZ also revised the minimum capital requirements, statutory reserve requirements and interest rates periodically (RBZ, 2005). Further, the RBZ designed a number of interventions including the Troubled Bank Resolution Framework (TBRF) in 2005 whose main objectives were to: “strengthen the banking system and promote sound banking practices, develop permanent solutions for troubled banking institutions, promote economic development and growth and restore stability of the financial sector; and preserve indigenisation of the financial sector” (RBZ, 2005:15).

However, despite all the Government and RBZ’s efforts to stabilise the banking sector, the sector continued to experience ongoing bank closures. For example, CFX which had faced challenges in 2004 collapsed for the second time before Interfin acquired it in 2010. Premier Banking Corporation was also taken over by Eco Bank in the same year. Renaissance Merchant Bank experienced challenges related to insolvency and misuse of borrowed and depositors’ funds around June 2011 and was put under curatorship (RBZ, 2011). Renaissance Merchant Bank was eventually taken over by the National Social Security Authority (NSSA) in 2012 and rebranded to Capital Bank (Mabvure, Gwangwava, Faitira, Mutibvu, and Kamoyo,

2012). The bank was eventually closed by RBZ in 2014 mainly because of an unsound financial position, as NSSA no longer wanted to inject more funds into the bank citing no future profitability prospects in the bank (RBZ, 2014).

According to the IMF (2012), more banks experienced severe distress in 2012. The RBZ closed Interfin while Genesis Bank voluntarily surrendered its license after facing challenges in 2012. Some banks (Barbican Bank, Trust Bank and Royal Bank) that were put under curatorship because of various challenges and were re-issued with their operating licenses to operate independently in 2010 have also since closed. Barbican Bank had its banking licence revoked by the RBZ in 2013 after it failed to meet the minimum capital requirements (RBZ, 2013). The RBZ also revoked the banking licence of Trust Bank in 2013 largely due to abuse of depositor funds while Royal Bank surrendered its banking licence in 2012 after experiencing challenges (RBZ, 2013). In early 2015, Allied Bank voluntarily surrendered its banking licence and AfrAsia Bank, formerly Kingdom Bank, was closed after it also surrendered its banking licence (RBZ, 2015). The recent closures are likely to worsen the sector's reputation, as, given the sensitivity of the banking sector, any form of negativity can cause panic mainly among the banking public, further eroding the trust and confidence in this already-challenged sector. In total, Zimbabwe experienced 20 bank failures after 1980 (Dhliwayo, 2015).

The number of financial institutions in the Zimbabwean banking sector has since reduced to 19 as detailed in Table 1.2 below because of the aforementioned challenges in the banking sector.

Table 1.2: Composition of the Zimbabwean banking sector - 2018

Composition of the Banking Sector	**Number**
Commercial Banks	13
Building Societies	5
Savings Bank	1
Total Institutions	**19**

Source: RBZ (2018).

From an economic environment perspective, Zimbabwe was generally stable until the late 1990s. However, during the period 1997-1998, the economy started experiencing a downturn, mainly because of the political decisions that took place which negatively affected the financial standing of the country (Nyoka, 2015). This implies that economic policies were now driven mostly by political agendas. These detrimental political decisions included among others:

- In 1988, the Zimbabwean government pursued an ill-advised military incursion into the Democratic Republic of Congo (DRC), named Operation Sovereign Legitimacy, on the basis of defending the democratic regime which resulted in the country incurring massive costs with no apparent benefit to the Zimbabwean economy (Makoni, 2010);
- Unbudgeted pay outs awarded to war veterans in 1997 resulting in a lot of strain on the country's fiscus, further culminating in the unprecedented depreciation of the Zimbabwean dollar by 75% as the market responded to this development. Consequently, the depreciation of the Zimbabwean dollar became a catalyst for further inflation (Makoni, 2010);and
- A poorly-planned Agrarian Land Reform programme launched in 1998, a situation in which the majority of the white commercial farmers were evicted and replaced by black farmers without due regard to land rights or compensation systems (Makoni, 2010). This development resulted in poor productivity in agricultural activities as some of the new farm owners lacked the expertise and financial resources required for large-scale farming activities which was detrimental to Zimbabwe as it largely depended on agriculture (Nyoka, 2015).

These ill-advised political decisions led to the withdrawal of multinational donors and isolation of the country (Makoni, 2010). The resultant net effect was hyperinflation, company closures, food shortages, and foreign currency shortages which led to fuel shortages and impacted negatively on production in the industries. Furthermore, the Gross Domestic Product had been on the decline since 1997 (Makoni, 2010). The negative outlook for the Zimbabwean economy resulted in reduced banking activities due to a decline in industrial activities (Nyoka, 2015).

In 2009, the RBZ abandoned its local currency, the Zimbabwean dollar and introduced a number of foreign currencies that included, US dollar, Euro, South African Rand, UK Sterling pound and Botswana Pula in an effort to stabilise the economy and to curb the hyperinflation that had characterised the Zimbabwean economy (RBZ, 2009). Another four currencies, Australian Dollar, Chinese Yuan, Indian Rupee, and Japanese Yen were also added in 2014 (RBZ, 2014).

Despite repeated assurances by the government and the central bank that the Zimbabwean banking industry is safe, there have been signs of struggle, particularly among the locally-owned banks, as some banks are still failing to meet daily demand for cash from depositors (Mataranyika, 2015). While the country currently has 19 operational financial institutions including foreign-owned banks, Barclays, Standard Chartered, MBCA and Stanbic

(RBZ,2018), confidence and trust in the banking sector continues to deteriorate (Sandada and Magobeya, 2016).

In light of highlighted threats and challenges in the Zimbabwean banking sector, banks that want to regain customer trust should endeavour to make trustworthiness their strategic priority. Therefore, it is imperative for the Zimbabwean bank custodians to gain a better understanding of the dimensions of trustworthiness, which will aid them in projecting a trustworthy image in the minds of present and potential consumers in order to rejuvenate trust and confidence in this sector.

1.3 RESEARCH PROBLEM

There is documented evidence in the bank literature on the importance of a viable banking sector in a country and the pivotal role trust plays in boosting confidence in financial institutions (Edelman, 2013; Gillespie and Hurley, 2013). Given this accepted importance of trust, it is surprising that some banks are still exhibiting more signals of distrust than of trust as expected, shattering consumer trust and confidence in the process. In response, governments through their central banks tend to introduce policy initiatives that focus heavily on regulation and control. Such regulations are usually designed to restore confidence on consumers' expectations of the banks' future behaviours (Sitkin and Beis, 1994) and to ensure safety of transactions taking place within the sector (Gillespie and Hurley, 2013). Surprisingly, consumer trust is still elusive in the Zimbabwean banking sector despite all these measures.

The challenges experienced in the Zimbabwe banking sector have had a profound impact on bank customers, with some people harbouring negative sentiments towards this sector (Mutasa, 2015; Sandada and Magobeya, 2016). Generally, these sentiments do not prevent some of the customers from continuing to use bank products, but there is a significant number of people who have now disconnected from banking services and whose mistrust of the sector deters them from taking up basic bank products. According to a report by FBC Securities (2013), 76% of the Zimbabwean population has no access to formal financial services, this was attributed to confidence and trust issues, among other factors. Similarly, commenting on the deteriorating consumer confidence in the Zimbabwean financial sector after submitting a petition to parliament and the RBZ, the Zimbabwe Banks and Allied Workers Union (ZIBAWU) secretary-general, Mutasa (2015) stated that: the erosion of consumer confidence in the Zimbabwean financial sector was affecting viability in this sector which was also prohibiting the marginalised population from accessing formal banking facilities resulting in a negative

impact on the economy. This implies that the low trust levels contribute to high numbers of the underbanked in Zimbabwe.

Ndela (2014) stated that: because of the historic trust issues in the banking sector, the majority of individual bank customers were now mostly using banks for transactional purposes (receiving deposits and making withdrawals) without necessarily maintaining any savings in their bank accounts. The situation has worsened lately as the majority of corporate account holders have also started leaving their bank accounts with only the minimum balance required. This creates challenges for banks in playing the important role of offering finance to businesses that want to invest and expand, enabling economic growth and prosperity (Levine, 2003).

The Chief Executive Officer of the Consumer Council of Zimbabwe (CCZ), Siyachitema (2014) also expressed her concerns regarding the shortcomings in the Zimbabwean banking sector which she said, negatively affected bank consumers. She stated that the RBZ was complacent in its management of the banking sector, as bank customers only get information on collapsed banks when the banks have already collapsed and when it is too late to recover their savings from these troubled banks. She further stated that it was the responsibility of the RBZ to monitor banks and that banks should be equally transparent and not mislead the banking public.

Owens (2012) stated that, when citizens of a country start having negative perceptions caused by immoral behaviours within the financial sector, they become hesitant to do business with financial institutions. Furthermore, when bank customers become sceptical about bank solvency, they become reactional and withdraw their deposits from financial institutions resulting in banks holding lower levels of deposits (Crabtree, 2013). In the event that banks fail to attract an adequate flow of deposits into the banking system, they become restrictive in their lending with the net effect of hampering business activities due to lack of adequate funding which may ultimately lead to a country going into recession (Crabtree, 2013). Thus, citizens' confidence in the financial sector is integral to the viability of an economy as an increase in bank failures can affect the overall economic stability of a country (Johnson and Peterson, 2014).

The current study argues that, in the midst of such a confidence crisis, the Zimbabwean banks face a number of challenges. First and foremost, customer recruitment and retention becomes difficult in such an environment. Secondly, maintaining a trustworthy image and regaining customer confidence becomes challenging but very crucial in the success of the sector. Finally, finding ways to leverage their trustworthiness as a way of differentiating themselves

from the competitors can be challenging without first gaining insights into the consumers' minds regarding their trustworthiness perceptions. Therefore, with lingering uncertainty about the financial sector in Zimbabwe, knowledge about how banks can reconnect with customers and reignite consumer trust becomes a necessity, if not a priority. It is against this background that this study sought to investigate trustworthiness dimensions of banks that drive consumer trust in the banking sector, using the Zimbabwean banking sector as a point of reference.

1.4 RESEARCH OBJECTIVES OF THE STUDY

The primary objective of this study is to explore the concept of trustworthiness by investigating trustworthiness dimensions of banks that drive consumer trust in a banking sector that is experiencing a confidence crisis, the Zimbabwean banking sector being the point of reference. The secondary objectives of the study are as follows:

- To determine trustworthiness factors that can be regarded as having the strongest influence on the decision-to-trust a bank by its customers.
- To examine the influence of bank trustworthiness on the behavioural intention of its customers.
- To examine the influence of bank trustworthiness on the affective commitment of bank customers.
- To examine the influence of affective commitment on behavioural intentions on the part of the bank customers.

1.5 RESEARCH QUESTIONS

The following research questions where formulated.

- Which trustworthiness factors can be regarded as having the strongest influence on the decision to trust bank by its customers?
- What influence does bank trustworthiness have on behavioural intentions of bank customers?
- What influence does bank trustworthiness have on the affective commitment of bank customers?
- What influence does affective commitment have on behavioural intentions of bank customers?

1.6 CONCEPTUAL FRAMEWORK AND HYPOTHESES

A conceptual framework was developed in order to aid the explanation of the relationships between the study constructs. Figure 1.1 below illustrates the conceptual framework proposed for the present study and the associated hypotheses.

Figure 1.1. The proposed study conceptual framework and hypotheses

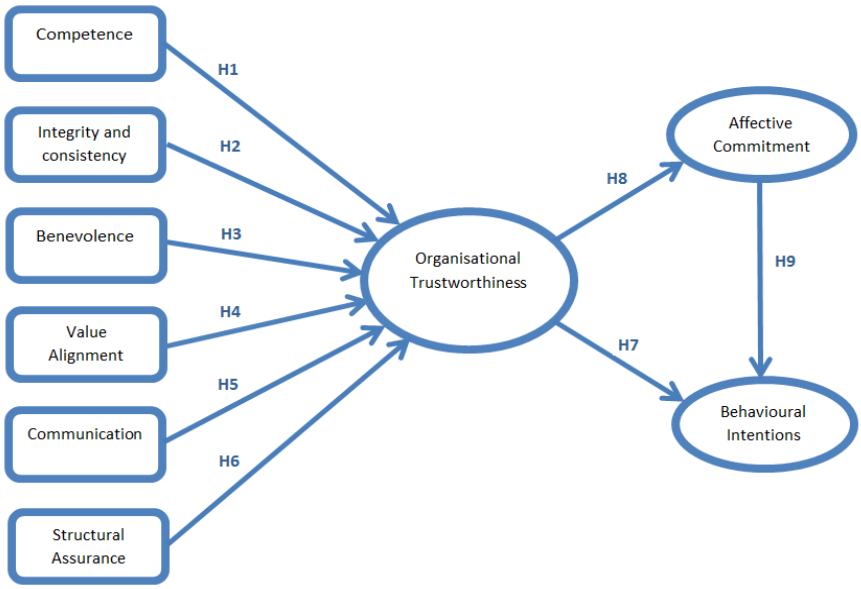

Source: Developed for this study.

As depicted in this figure, the study proposes that the extent to which banks are perceived as being trustworthy is a result of benevolence concerns, competence, integrity and consistency, shared values, structural assurance and communication. This study extends the understanding of trust by empirically linking organisational trustworthiness perceptions to two relational outcomes: behavioural intentions and affective commitment. Furthermore, the study model also predicts that affective commitment can lead to positive behavioural intentions.

Based on the conceptual framework in Figure 1.1, the research hypotheses of this study are:

- H_1: Competence has a positive influence on organisational trustworthiness.
- H_2: Integrity (Consistency) has a positive influence on organisational trustworthiness.
- H_3: Benevolence has a positive influence on organisational trustworthiness.
- H_4: Value alignment has a positive influence on organisational trustworthiness.
- H_5: Communication has a positive influence on organisational trustworthiness.
- H_6: Structural assurance has a positive influence on organisational trustworthiness
- H_7: Organisational trustworthiness has a positive influence on behavioural intentions.

- *H_8:* Organisational trustworthiness has a positive influence on affective commitment.
- *H_9:* Affective commitment has a positive influence on behavioural intentions.

The rational for the hypotheses formulated above are discussed fully in chapter 3.

1.7 OVERVIEW OF THE RESEARCH APPROACH

This study takes the pragmatist philosophy position which allows for the use of mixed methods. The current study thus adopted both the quantitative and qualitative methods of data collection. By so doing, the researcher was able to integrate different perspectives so as to improve data interpretation resulting in innovative and dynamic research that is flexible, adaptable and relevant. The study adopted a sequential explanatory mixed-methods research design (quantitative dominant). Sources of data include both primary and secondary data. Secondary data sources were mainly used in reviewing literature relevant to this study which enabled the researcher to identify the knowledge gap. A self-administered questionnaire was used in collecting data for the quantitative phase of this study while semi-structured interviews were used to collect data for the qualitative phase of this study. The structural equation model (SEM) was done to determine the statistical model that sought to explain the relationship among the variables. Ethical considerations were also taken into account throughout the research process.

1.8 SIGNIFICANCE OF THE STUDY

This study contributes to the existing gaps within the literature on trust and trustworthiness specifically in the African banking context by investigating the underlying trustworthiness dimensions that make a bank trustworthy in the Zimbabwean banking sector which is experiencing a confidence crisis. The study also investigates the influence of the perceived trustworthiness on behavioural intentions and affective commitment as well as the relationship between affective commitment and behavioural intentions. The significance of this study is relevant to practice and theory in the following ways:

This study can be regarded as a pioneering sequential explanatory study that investigates trustworthiness of banks by linking perceived bank trustworthiness dimensions prevalent in the literature (benevolence concerns; competence; integrity and consistency; shared values; structural assurance and communication) to two relational outcomes (affective commitment and behavioural intentions). Furthermore, the study also links affective commitment to behavioural intentions in the same conceptual framework. Other empirical studies in bank marketing literature, to date, are yet to conceptualise these relationships in a single model.

There is a significant number of studies related to trust, and more recently, there has been an interest by researchers to explore the concept of trustworthiness (Järvinen, 2014; Nienaber *et al.,* 2014; Terres, Santos and Basso, 2015). However, existing empirical studies related to trust and behavioural intentions specifically in the financial sector are mostly contextualised in European countries, Asia and the USA suggesting that empirical studies relating to consumer behaviours like this study are given less attention in Africa (Opoku and Akorli, 2009).This is despite empirical evidence suggesting that culture is a determinant of consumer behaviours and their buying habits in a country (Fock, 2004; Jabnoun and Khalifa, 2005). Furthermore, Oh and Parks (1997) argue the need to refine methodologies and theories to suit a specific situation.

Given the difference in orientation and culture among consumers across nations, this study argues that the behavioural intentions and buying habits of consumers in African countries based on their trustworthiness perceptions that are shaped by their culture orientation will be different from those of European and Asian countries (Zhao, Koenig-Lewis, Hammer-Lloyd and Waro, 2010). As such, the study contributes to the existing body of knowledge in the trust domain by providing some empirically-tested insights into banking in the context of the African continent; hence, the significance of this study.

In addition, most studies reporting on trust and confidence crises related to the financial sector relied on explaining the crises only after they had occurred, for example, Hurley, Gong and Waqar (2014) and Johnson and Peterson (2014). This is unlike the current study, which is contextualised in the Zimbabwean banking sector that is currently experiencing a financial crisis. Thus, this study will bring to light how trustworthiness of banks is perceived in a banking sector that is not only currently experiencing low trust levels, but also experiencing economic and political challenges. Shim *et al.* (2013) suggest that consumer trust in a nation's banks is a huge determinant of the overall prosperity of a country and the banking sector. Therefore, findings and recommendations from the study can potentially be used by bank managers in setting up financial plans and marketing strategies that promote banking efficiency in a financially-distressed economic environment.

As highlighted by PWC (2014), regulation and political interference are ranked as the two major risks affecting the banking industry globally. Hence, for policy makers, particularly in the African continent where regulatory concerns are more prevalent, the results of the current study bring new insights into the role of structural assurance in influencing trustworthiness perceptions of bank customers in an uncertain economic and political environment. For researchers, the persistent poor performance of some banking sectors in the African continent, despite the reforms over the years, is a clear indication of the need for more sector-wide

studies that would guide policy for improving the sector. Hence, the findings of the current study can potentially guide future research that focuses on restoring confidence and trust in these banking sectors. Thiagaragan, Zairi and Dale (2001) as well as Opoku and Akorli (2009) also argue that there are few empirical studies focusing on business relationships outside of developed economies, further reinforcing the significance of the current study.

1.9 LIMITATIONS OF THE STUDY

The current study has limitations in that the study only focused on one country and on one sector (banking). Therefore, it is possible that trustworthiness of service providers in other sectors and in different countries could be influenced by other antecedents. This may result in this study not allowing for generalisation (Bart, Shankar, Sultan and Urban, 2005). Furthermore, the study focused on only four banks out of a possible nineteen financial institutions that comprise the Zimbabwe banking sector which limits the generalisation of the findings. Further, the study only focused on how trustworthiness influences affective commitment and how behavioural intentions influence affective commitment. It is recommended that future research should consider the commitment construct from the normative or continuance commitment perspective. Lastly, the current study is a cross-sectional study which essentially captured data at a specific period in time which is characterised by low confidence levels and a volatile economic environment. A longitudinal study is therefore recommended in future studies as it will capture changes in consumer trustworthiness perceptions over a longer period which can result in a more accurate picture of consumers' perceptions of bank trustworthiness in such environments.

1.10 ORGANISATION OF THE THESIS

This research report has seven chapters as outlined below:

Chapter 1: Introduction

Chapter 1 introduces the study. It discusses the theoretical background and context of the research, the research problem, the research objectives, the research questions, the significance of the study and the limitations of the study.

Chapter 2: Theoretical foundation and literature review

Chapter 2 discusses the theoretical background and the literature that underpins this study. The chapter highlights and evaluates developments in the trust domain, paying more attention to the developments of trust in the bank marketing context. The chapter concludes by discussing the identified gap based on the literature reviewed that this study addressed.

Chapter 3: Justification of the conceptual framework and hypotheses development

In this chapter, justification for the study constructs that led to the development of the research conceptual framework and hypotheses development are discussed.

Chapter 4: Research methodology

Chapter 4 discusses the research design and methodology adopted for this study. The chapter rationalises the choice of study design, population, sample size, data collection methods and data analysis methods. The ethical considerations undertaken during the research process are also discussed.

Chapter 5: Presentation of study findings

Chapter 5 presents the study findings. The findings are presented in a logical sequence and based on the two phases of the study, the quantitative phase and the qualitative phase.

Chapter 6: Discussion of research results and findings

Chapter 6 critically evaluates the study results in line with the study objectives, research questions and hypotheses developed. The study results are discussed in relation to the literature reviewed for this study.

Chapter 7: Conclusions and implications

This last chapter summarises the key findings of the study and the study's contribution to theory, methodology and practice is provided. Recommendations appropriate to bridging remaining gaps are presented including recommendations for potential research areas that complement the study.

1.11 CHAPTER SUMMARY

The above discussion provided an introduction to the study, the problem statement, objectives of the study, purpose and significance of the study. The chapter also provided a brief discussion of the methodology used in this study as well as the limitations of this study. Lastly, the chapter gave an overview of how the thesis is organised. Therefore, this introductory chapter presented a context for this study and helps clarify to the reader how the fulfilment of the research aims and objectives will make a contribution to marketing management practice in the banking sector. The next chapter provides an analysis of past and recent literature relevant to the study as well as identifying the gaps in the literature that justifies the rationale of conducting this study.

CHAPTER 2: THEORATICAL FOUNDATION AND LITERATURE REVIEW

2.1 INTRODUCTION

Chapter 1 gave an overview of the study context in which the research aims and objectives will be fulfilled. This chapter discusses the literature that underpins the study. According to Boote and Beile (2005), a well-developed literature review provides the basis of a good research project, whereas a flawed literature review usually results in a poor research project. Randolph (2009) suggests that a good literature review is useful in setting the boundaries of the research problem as it enables the researcher to easily identify the gap that a study aims to address. He further suggests that a good literature review forms the basis of a framework that a researcher can use to relate his/her findings to findings from previous studies. Therefore, this chapter critically analyses the literature in order to identify the gap that this study aims to address. The literature reviewed was also used as a reference point for the study findings discussed in Chapter 6.

This chapter begins by providing a theoretical background of the study followed by a discussion on the role of trust in relationship exchanges. Thereafter, an overview of the different views of trust emanating from the various scientific disciplines and definitions of trust and trustworthiness and how these two constructs relate and differ in the way they are conceptualised is provided. The chapter also discusses the different dimensions of trust and how trust is viewed in the marketing discipline under which this study resorts. Furthermore, the literature related to the importance of trust in the financial sector is reviewed, specifically in relation to studies connected to trust and trustworthiness within a banking context as well as an analysis of how consumers decide to trust or not to trust. Lastly and based on the holistic review of the literature, the gaps in the literature which this study aims to address are discussed.

2.2 THEORETICAL BACKGROUND – RELATIONSHIP MARKETING

The American Marketing Association (2004) defines marketing as: “an organisational function and a set of processes for creating, communicating, and delivering value to customers and for managing customer relationships in ways that benefit the organisation and its stakeholders”. Although this definition was later refined and approved by the American Marketing Association (2013) to “Marketing is the activity, set of institutions, and processes for creating, communicating, delivering, and exchanging offerings that have value for customers, clients, partners, and society at large”, the 2004 definition articulated the concept of Relationship

marketing (RM) in a more specific way and is also more relevant to the context of this study. From the 2004 definition, one can see that managing customer relationships is one of the key characteristics of marketing, while also stressing the importance of communication and delivery of value for the mutual benefit of all parties in an exchange relationship.

An analysis of the literature reveals a significant number of definitions on the concept of relationship marketing (RM). Among them is the definition by Grönroos (1997:407) who defined RM as the "process of identifying and establishing, maintaining, enhancing, and when necessary terminating relationships with customers and other stakeholders, at a profit, so that the objectives of all parties involved are met, where this is done by a mutual giving and fulfilment of promises". This definition is unique in that it not only focuses on identifying and maintaining relationships with customers, but also draw attention to the importance of terminating these relationships if necessary. Morgan and Hunt (1994:22) stated that "RM refers to all marketing activities directed towards establishing, developing, and maintaining a successful relational exchange".Sheth and Parvatiyar (2000:9) define RM from an ongoing perspective stating that "RM is the ongoing process of engaging in cooperative and collaborative activities and programs with immediate and end-user customers to create or enhance mutual economic value at reduced cost". RM was also defined "as a process that concerns in attracting, developing, and retaining customer relationships" (Berry, 1983:25). Hunt and Arnett (2006) define RM from the perspective that identifies trust as an essential ingredient in the relationship: "RM philosophy is based on generating competitive advantages for the enterprise by retaining customers and enhancing their satisfaction by creating trust-based relationships of mutual interests". Similarly, Arnett and Badrinarayanan (2005) describe RM as the ability of an organisation to identify, cultivate and manage cooperative relationships with key customers based on trust, communication and commitment to the relationship.

From the definitions above, it is evident that the core of RM is in developing and maintaining relationships that are mutually beneficial and trust and commitment are essential ingredients in relationship marketing. The definition by Arnett and Badrinarayanan (2005) is more aligned with this study as it reinforces the importance of trust, commitment and communication as essential building blocks in building mutually-beneficial relationships.

2.2.1 Evolution of RM Theory

According to Bartels (1976) and Hunt and Goolsby (1988), the marketing discipline emanated from the economics discipline. The motivation behind this growth was a general lack of interest in research among economists that focused on market behaviour mostly connected to the

functions of the middlemen. Berry (1983) is largely attributed with establishing the concept of relationship marketing. He argued that, since its introduction in the early 1980s, RM became a prominent area of study within the marketing field due to its significant impact on businesses. However, even before then, other researchers had formulated a number of ideas concerning RM; for example, McGarry, (1953; 1958) proposed six activities in his formal list of marketing functions: termination function, propaganda function, merchandising function, physical distribution function, pricing function, and contractual function (Sheth and Parvatiyar, 2000). Alderson (1958:27,28) extended the general view of economics scholars which regards exchanges as largely driven by maximisation of value and the efficiency in the market, in arguing that exchanges involve people, and thus, the sociological factors related to "power structure" and "two-way exchange of commitments" must be considered. Additionally, he suggests that the social psychological factors of "communication" and "emotional reactions must also be taken into consideration in marketing thoughts". Furthermore, Alderson (1965) was also a prominent contributor to inter- and intra-channel cooperation, which was a topic of interest in marketing studies for the following three decades. The marketing focus was further refined by Bagozzi (1975: 32) in applying the "exchange theory" after taking into consideration two key questions of the marketing theory:

(1) "Why do people and organisations engage in exchange relationships?"
(2) "How are exchanges created, resolved, or avoided?"

Since then, many other marketing scholars focusing on the traditional channel cooperation have emerged. These are attributed to the application of various theoretical ideas emanating from the economics, political, sociology and law disciplines (Anderson and Narus, 1990; Stern and El-Ansary, 1992; Weitz and Sandy, 1995). With the growth of the concept of RM, several other perspectives emerged during the 1980s and 1990s. One of these prominent perspectives dealt with integrating quality, customer services, logistics and marketing (Christopher, Payne and Ballantyne, 1991). Other researchers that include Morgan and Hunt (1994) approached RM from a relationship partnering and alliance perspective.

During the 1980s and 1990s, RM emerged as a separate academic domain. At that point, researchers argued that RM represented a "paradigm shift in marketing" from its previous focus on "transactions," in which the "4P model" was applied in many organisations to manage marketing-mix variables (Grönroos, 1994:4; Sheth and Parvatiyar, 2000). The evolution of the RM theory and practice provides different perspectives emanating from a number of different theories from different study disciplines as outlined in Table 2.1 below:

Table 2.1: Evolution of the RM Theory

Theory and/or Service Discipline	Key contribution	Author	Definition
Institutional economics, sociology, and psychology	Integrated sociological and psychological factors into prevalent institutional economic perspectives of rational economic actors.	Berry (1983:3)	"RM is attracting, maintaining and enhancing customer relationships".
Exchange theory (sociology)	Redirected marketing thought by applying "exchange theory" to two key questions in marketing theory: 1) "Why do people and organisations engage in exchange relationships?" and 2) "How are exchanges created, resolved, or avoided?"	Grönroos (1994:6)	"Marketing aims to establish, maintain, enhance and commercialise customer relationships so that the objectives of the parties involved are met. This is done by a mutual exchange and fulfilment of promises".
Power and dependence theory (sociology)	Consistent with the criticality of "middlemen" to business, offered power/dependence between channel partners as the vital factor in understanding exchange relationship and performance.	Gummesson, 1996, (2006:3)	"RM is seen as relationships, networks and interaction".
Relational contracting theory (political science) and social exchange theory (sociology)	Integrated relational contracting theory with social exchange theory in a dynamic relationship framework. Proposed that relational norms have important roles in guiding relationship behaviour in business exchanges.	Martin-Consuegra, Molina & Esteban (2006:100)	"RM is defined from a relational contracts perspective which focuses strongly on the maintenance of the exchange relationship and can result in benefits such as social benefits, risk reduction, economic advantages and additional service."
Transaction cost economics (economics)	Demonstrated that relationship governance can serve many of the same functions as vertical integration from a transaction cost perspective by suppressing opportunistic behaviour, reducing transaction cost and promoting performance-enhancing investments.	Parvatiyar & Sheth (2000:3-5)	"RM is an ongoing process of engaging in cooperative and collaborative activities and programs with immediate and end-user customers to create or enhance mutual economic value, at reduced cost".
Commitment-trust theory of RM (sociology and psychology)	Extended RM beyond customer seller interactions to offer a well-argued theory of RM that revolves around trust and commitment. This framework provided the	Shani & Chalasani (1992:34);	"RM is an integrated effort to identify, maintain and build up a network with individual customers and to continuously strengthen the network for the mutual benefit of both sides, through interactive, individualised and value-added contacts over a long

Theory and/or Service Discipline	Key contribution	Author	Definition
	default theoretical basis for the majority of RM research for the next decade.	Morgan & Hunt (1994:22)	period of time". "RM refers to all marketing activities directed towards establishing, developing and maintaining successful relational exchanges".
Resource-based-view of inter-firm relationships (management)Resource-based-view of inter-firm relationships (management)	"Integrated social network theory to develop an inter-firm-specific RM framework, which shows that in addition to relationship quality (trust, commitment), two other relational drivers are key to understanding the impact of inter-firm relationships on performance: relationship breadth and composition".	Christopher *et al*. (2004:80); Sheth and Parvatiyar (1995:256)	The broadening of marketing to include relationships with a number of stakeholders or six market domains. This framework includes: (1) "Customer markets including existing and prospective customers and intermediaries";(2) "Referral markets – these include two main categories, namely existing customers who recommend their suppliers to others and referral sources or "multipliers" such as an accounting firm who may refer work to a law firm";(3) "Influence markets which include financial analysts, shareholders, the business press, government and consumer groups";(4) "Employee markets that are concerned with attracting the right employees" to the business;(5) "Supplier markets that include traditional suppliers as well as organisations with which the business has some form of strategic alliance"; and (6) Internal markets that relate to the businesses "internal departments and staff". "RM is a marketing orientation that seeks to develop close interactions with selected customers, suppliers and competitors for value creation through cooperative and collaborative efforts".
Inter-firm RM based on social exchange and network theories (sociology)	Integrated social network theory to develop an inter-firm RM framework, which shows that in addition to relationship quality (trust, commitment), two other relational factors are key to comprehending the impact of inter-firm relationships on performance: relationship breadth and composition.	Richey, Skinner & Autry (2007:27)	RM is seen as inter-firm relationships which position successful commerce as inclusive of establishing, developing and maintaining successful relational business-to-business exchanges.
Micro-theory of interpersonal relationships (evolutionary psychology and sociology)	Integrated gratitude, norms of reciprocity and guilt merged into a dynamic model of intrapersonal RM based on an evolutionary or quasi-Darwinian perspective of relationships and cooperative behaviour.	Palmatier, (2008:14-15)	RM is seen in terms of interpersonal relationships that describe integrated gratitude, guilt and norms of reciprocity merged into a dynamic model of intrapersonal RM.

Source: Adapted from Bruhn (2003:10); Palmatier (2008:14-15) and Mentz (2014:20).

2.2.2 Benefits of RM

The RM theory subscribes to the notion that an organisation's profitability depends on the customer retention ability of an organisation (Egan, 2008). Ravald and Grönroos (1996) argue that customer retention in RM results in mutually beneficial relationships that are long-term and stable. Similarly, Bateson and Hoffman (2011) also argue that organisations that engage in customer relationship activities for the purpose of developing long-term relationships with customers are likely to experience growth in the businesses. Loyal customers are known to be an organisation's advocates of positive word of mouth which is a powerful tool for recruiting new customers for a business (Reichheld, 2006). Furthermore, loyal customers are willing to try new products and services offered by an organisation as well as providing constructive feedback that will, in turn, allow organisations to improve their products (Reichheld, 2006). Consequently, all these factors will result in profitable businesses as suggested by Reichheld and Sasser (1990) that, even an increase of 5% in customer retention can result in an increase of 20-25% in profitability. Organisations, particularly in service industries, are paying more attention to developing innovative strategies that enable them to create long-term relationships with their customers as well as meeting and, at times, exceeding their customers' expectations by providing exceptional services/products in an environment of trust and commitment (Buttle, 1996).

Generally speaking, RM-based strategies facilitate an organisation's ability to develop, share and leverage resources that include competences, processes and information with other organisations and/or customers. Thus, through these cooperative behaviours, organisations are able to compete effectively in the market place (Morgan and Hunt, 1994). Successful RM-based strategies have been linked to:

- Increased levels of customer satisfaction (Abdul-Muhmin, 2002);
- Organisational learning (Selnes and Sallis, 2003);
- A source of competitive advantage in the market (Day, 2000);
- Better financial performance (Hunt, 2000);
- The desire to pursue a mutual partnership (Gruen Summers, and Acito, 2000);
- Acquiescence by partners (Morgan and Hunt, 1994); and
- Decreased uncertainty perceptions (Morgan and Hunt, 1994).

2.2.3 Factors Associated with Successful RM

Within marketing research, a number of factors have been associated with successful relational exchanges. However, the seven prominent factors prevalent in the literature include commitment, keeping promises, competence, trust, cooperation, communication and shared values as highlighted in Table 2.2 below.

Table 2.2: Factors associated with successful RM

Factor	Definition	Authors
Trust	A willingness to rely on an exchange partner in whom one has confidence	(Dwyer *et al.*, 1987; Morgan and Hunt, 1994; Sividas and Dwyer, 2000; Wilson, 1995)
Commitment	The desire to stay and invest in a mutually beneficial relationship.	(Anderson and Weitz, 1992; Day, 1995; Geyskens *et al.*, 1999; Moorman *et al.*, 1992),
Competence	Perceptions related to the ability of a service provider to provide the promised services timeously and satisfactorily.	(Selnes and Sallis, 2003; Sichtmann, 2007)
Cooperation	Similar or complementary coordinated actions taken by firms in interdependent relationships to achieve mutual outcomes or singular outcomes with expected reciprocation over time	(Anderson and Narus, 1990; Morgan and Hunt, 1994)
Keeping promises	The extent to which the mutual exchange and fulfilment of promises is achieved.	(Grönroos, 1990, 1994).
Value Alignment	The extent to which parties in a business transactions share congruent values, policies and goals.	(Morgan and Hunt, 1994).
Communication	Sharing of both formal and informal information timeously and effectively.	(Anderson and Narus , 1990; Mohr and Nevin, 1990).

Source: Adapted from Gupta and Sahu (2012) and Shelby, Hunt and Dennis (2006).

Spekman, Isabella and MacAvoy (2000:43) state that “trust and commitment are *the sine qua non* of alliances, for without trust and commitment, there can be no alliance”. This implies that trust and commitment are fundamental in building strong cooperative relationships that are mutually beneficial. Morgan and Hunt (1994) argue that the basis of inter-firm relationships is a common understanding that organisations must “cooperate to compete.” Similarly, Grönroos (1994) also argues that relationships based on similar values, keeping promises, effective communication usually lead to trust which in turn promotes cooperation. The above discussion point to the need for trust and commitment to facilitate cooperation in business relationships.

RM theory is also based on the notion that successful relationships develop over a significant period of time and thus, they are long-term in nature as opposed to (transaction-based) exchanges which are short-term (Morgan, 2000). Furthermore, Morgan (2000:485) states that "Partners must view past interactions with their partners favourably and believe that future actions by their relationship partners will be constructive – they must perceive that they and their partners are, and will continue to be, compatible". The above discussions illustrate the significant role of the RM concept and how it continuously evolves to suit the current marketing focus. "A key goal of RM theory is the identification of key drivers that influence important outcomes for the business and a better understanding of the causal relations between these drivers and outcomes" (Hennig-Thurau, Gwinner and Gremler, 2002:231). However, "a key challenge for researchers is to identify and understand how managerially-controlled antecedent variables influence important RM outcomes" (Hennig-Thurau *et al*., 2002:230). In the context of this study, the projected RM outcomes include trustworthiness, loyalty, commitment and positive behavioural intentions.

2.3 THE ROLE OF TRUST IN BUILDING RELATIONSHIPS

In general, any successful relationship, from friendship, marriage and parties to a business transaction depend to a greater or lesser extent on the level of trust between the parties (Arnott, 2007). Trust is a requirement in all relational exchanges as it enables people to deal with the social and physical world (Mayer *et al.,* 1995; Rosseau, Sitkin, Burt and Camerer, 1998). It is also regarded as an essential governance mechanism in social and business exchange relationships (Morgan and Hunt, 1994). Theorists Lewis and Weigert (1985a:968) suggest that trust is "indispensable in social relationships" as it enables people to venture into risky and uncertain situations (Mayer *et al.*, 1995).

The degree of trust that develops between companies and their customers has been described as a fundamental relationship building block (Wilson, 1995) and a critical element of economic exchange (Ring, 1996). Wilson (1995) further suggests that there is a link between mutual business goals and satisfaction which leads to higher levels of commitment in a relationship. As a customer trusts the service provider more, the higher the perceived value of the relationship by the customer becomes (Walter, Holzle and Ritter, 2002). Consequently, there will be greater chances of a long-term relationship between the customer and an organisation (Bews and Rossouw, 2002). Thus, the trust that materialises between customers and suppliers usually increases the longevity of the business. Some researchers view trust as a fundamental foundation of interpersonal relationships (Rempel, Holmes and Zanna, 1995) and as an influential stability factor in the operations of an organisation (Ennew and Sekhon, 2003).

Dion, Easterling and Miller (1995) conducted research on United States sellers and buyers and concluded that trust is fundamentally important in the development of trade relationships and should therefore be prioritised by sales and purchasing managers. Furthermore, Jo, Hon and Brunner (2004) consider trust, satisfaction, commitment, mutual relationships and exchange relationships as crucial in developing business relationships. The significance and importance of trust in influencing cooperative and enduring relationship was best described by Hurley (2012:2) when he stated that: "When we lose trust, we lose cooperation. Without trust, organizations and societies begin to break down. The loss of trust is much more dangerous than the loss of loyalty because it is an essential element to all effective relationships".

2.4 TRUST – A MULTIPLE PERSPECTIVE ANALYSIS

Trust as a construct has its theoretical roots in various scientific disciplines that include philosophy, economics, psychology, and sociology and each discipline views and conceptualises trust differently (Yee, Yeung and Edwin Cheng, 2010). However, many scholars allude to the pivotal role of trust in any social interaction as described by Deutsch (1973:1) who is considered by many as one of the pioneering theorist in trust studies: "trust involves the delicate juxtaposition of people's loftiest hopes and aspirations in relation to their deepest worries and darkest fears". Further, there is a general consensus among researchers that trust is an elusive concept often meaning different things to different people and, as a result, it is relevant to several academic disciplines (Lane and Bachmann, 1998; Nooteboom, 2002). These different perspectives of trust related to this study are discussed below.

2.4.1 Calculative (Economic) Perspective of Trust

Economists suggest that trust is linked to particular situations in which perceived risk is dependent on behaviours exhibited by the different parties involved (Korczynski, 2000). Economists also conceptualise trust in terms of economic theories such as the prisoner's dilemma and game theory (Axelrod, 1984). According to Axelrod (1984), game theory is based on the assumption that the behaviours of 'actors' in a transaction are exclusively determined by calculation. Macy and Skvoretz (1998) describe the concept of a prisoner's dilemma as based on the notion that in everyday life, the prisoner dilemma exists in the context of communication between parties in a relationship. They give a typical example of partners in marriage who lack sufficient degree of trust in each other: chances are, they are living in a constant prisoner dilemma as options of advantageous alternatives constantly exist (Macy and Skvoretz, 1998).

The calculative view of trust refers to the economic view of trust and Haumer (1998) suggests that parties to a business transaction aim to gain maximum utility from each other. Further, within this perspective, there is opportunist behaviour which is often associated with trust in terms of maximising opportunism by calculating the consequences of the exchange (Korczynski, 2000). Thus, the calculative view of trust highlights the perceived risk when one chooses to trust, as well as the assumption that parties to a business transaction are in a position to assess and predict potential consequences of the transaction whether it results in a profit or loss.

The classical theory of transaction cost in economics is based on the view that decisions taken on whether trust within a business relationship are more reliant on asset specificity. Williamson (1985:55) describes asset specificity as "durable investments that are undertaken in support of particular transactions, the opportunity cost of which investments is much lower in best alternative uses or by alternative users should the original transaction be prematurely terminated". Williamson (1993) argues that if "contractual safe guards" are in place, then the economic transaction should not depend on trust.

2.4.2 Psychological Perspective of Trust

The psychological view of trust is conceptualised mainly in terms of interpersonal trust where the assumption is that in everyday situations, there is a natural reliance on the behaviour of others in terms of fulfilment of promises and their willingness to cooperate, suggesting that trust is essential for the development of a positive interpersonal relationship (Rotter, 1967). Rousseau *et al.* (1998:395) suggest that from a psychologist's point of view, "…the meaning of trust, as the willingness to be vulnerable under conditions of risk and interdependence, is a psychological state that researchers in various disciplines interpret in terms of 'perceived probabilities', 'confidence and positive expectations'". Rousseau *et al.* (1998:396) further state that:

> … the intensity of the reaction [to violation] is directly attributable not only to unmet expectations of specific rewards or benefits, but also to more general beliefs about respect of persons, codes of conduct and other patterns of behaviour associated with relationships involving trust.

It is clear that business relationships involve an element of risk which is often mitigated by trust. Thus, if there is mutual trust, parties to a transaction are willing to be vulnerable in anticipation of the resultant benefits. A significant proportion of psychological theory in relation to trust is formed on the basis of the notions that:

- Trust "entails a state of perceived vulnerability or risk that is derived from individuals' uncertainty regarding the motives, intentions, and prospective actions of others on whom they depend" (Kramer 1999: 571); and
- Trust is generally an attitude regarding expectation about people as well as the social systems in which they exist (Kramer, 1999; Luhmann, 1988; Rotter, 1967).

Psychological researchers have investigated both these conceptualisations of trust; however, other researchers particularly from the sociological background argue that trust is a rational choice and that conceptualising trust in a generalised form is irrational. For example, Hardin (1991:186) disagrees with the concept of generalised expectancy trust by stating that, "My trust of you must be grounded in expectations that are particular to you, not merely in generalised expectations. If I always trust everyone, then I do not meaningfully trust anyone". Hardin (1991) further argues that trust is a rational act as it occurs after an evaluation of potential losses and gains as well as after a risk assessment. Similarly, Coleman (1990:99), proposed in his model that trust "is nothing more or less than the considerations a rational actor applies in deciding to place a bet". Furthermore, Hardin (1991:186) concluded that trust is "inherently a rational or intentional commitment or judgement".

However, Fukuyama (1995) gives a different view in proposing that the concept of trust is "a-rational", suggesting that it is neither rational nor irrational. He posited that while there are rational aspects of trust, there are also "a-rational" aspects of trust that are characterised by decisions that people make without consciously analysing or thinking them through.

2.4.3 Sociological Perspective of Trust

Contrary to the psychological perspective of trust that views trust as a psychological event taking place within individuals, the sociological perspective of trust views trust as an interpersonal process that is motivated by a fundamental human need for cooperation from others and interdependence with the social world (Spekman, 1988). Thus, according to this view point, trust is conceptualised as existing in social properties of relationships between people (Granovetter, 1973). Furthermore, from a psychological perspective, trust is regarded as a foundation of social exchanges between interacting parties that help to define how individuals trust within a social context (Spekman, 1988), whereas, from a social perspective, trust has been described mainly in terms of a central belief regarding the intent or motives of another party (Andaleeb, 1996). Möllering (2006) describes the many facets of trust and the value of taking different perspectives on trust. However, his discussion pertaining to the leap of faith and reflexivity as anchors in the development of trust can be regarded as an important

contribution to the conceptualisation of trust as a dynamic process of social construction. As a social construct, trust is viewed as a variable that perhaps exhibits the strongest influence on interpersonal and group behaviour (Ferrin, Bligh and Kohles, 2008). The description of trust and trustworthiness by Hearn (1997:97) can arguably be regarded as one of the best descriptions of trust and trustworthiness from a social context:

> Trust and trustworthiness, and the moral individuals who embody them, arise in communitarian interdependencies and social institutions that instil in people the habits of reciprocity and responsibility and the sense of moral obligation whose presence affords the strongest grounds people have for trusting one another. Social capital, those features and practices of cooperation that enable people to work together in pursuit of shared purposes, originates and becomes abundant only where trust prevails.

The sociological perspective of trust also conceptualises trust in terms of shared values and feelings. Thus, trust is based on the belief that parties share the same values and are committed to serving the other party's best interests (Gill *et al.,* 2006). Transparency and reliable communication enhance the shared values and beliefs while consultations reinforce the belief that the trustee respects and takes the trustor's values seriously (Rothstein, 2005). Trust, from this perspective, is also regarded as a way of establishing individual and social predictability, facilitating the way people handle risk and the complexity regarding the outcome of future actions (Misztal, 1996).

The emphasis on the social view of trust is on social bonds, the interactions between individuals and their willingness to sustain a mutually respective relationship (Huemer 1998; Rousseau, Sitkin, Burt and Camerer 1998). Further, as a social construct, trust is more reliant on relationships and contractual agreements that influence behaviours of parties in a relationship towards each other (Spekman, 1988). Spekman (1988) and Zucker (1986) also suggest that human relationships are conceived based on the feelings individuals hold towards each other that are social in nature, thus the purely calculative conceptualisation of trust that does not take the social aspect of trust into consideration fails to adequately address the concept of trust. The sociological view of trust also conceptualises trust as a catalyst for building and maintaining social relationships. For example, Mayer, Davis and Schoorman (1995) define trust from this perspective as one party's behaviour towards another in a particular setting. Furthermore, trust from a social context does not only exist between individuals, but it also exists between individuals and organisations and this trust is mostly conceptualised as system trust which is fully discussed in section 2.7.2 of this chapter.

Personal relationships are regarded by many researchers, for example, Grönroos (1997) and Mayer *et al.* (1995) as pivotal in the trust-creating process. Similarly, Granovetter (1985) suggests that institutional arrangements are not critical factors in the creation of trust; instead, the social relations that develop between engaged parties are considered an important factor in the development of trust. Lorenz (1988) further suggest that a mutual exchange between engaged parties facilitates the development of trust through focusing on long-term relationships instead of focusing on short-term relationships. Furthermore, Lorenz (1988) states that reputation alone cannot be a determinant of trustworthiness, but time and personal experiences are crucial elements in the determination of trust. Thus, emotional bonds that develop between engaged parties grow and deepen over a considerable period of time signifying trust (McAllister, 1995).

2.5 DEFINING AND CONCEPTUALISING TRUST

From the analysis of the literature reviewed, it seems there is no definition of trust that is universally applied. However, there are a significant number of definitions of trust and the more pertinent ones are discussed in this section. According to Järvinen (2014), consumer trust from a banking perspective is based on consumer experience and dependent on the ability of banks to be reliable, observe rules and regulations as well as working well for the good of the general public. Trust from this perspective is also defined as a belief that the relationship between a bank and its customers is based on the understanding that both parties will act in the best interests of one another (Čater and Čater, 2009). Trust is also defined as “the willingness of a party to be vulnerable to the actions of another party based on the expectation that the other will perform a particular action important to the trustor, irrespective of the ability to monitor or control that other party” (Mayer *et al.,* 1995:712). The above definitions emphasise the importance of establishing mutually beneficial relationships based on trust and confidence that both parties (the bank and the customer) will fulfil their obligations to one another.

Morgan and Hunt (1994:23) conceptualise trust “as existing when one party has confidence in an exchange partner's reliability and integrity.” This definition is similar to that of Moorman, Deshpande and Zaltman (1993a:82) who define trust “a willingness to rely on an exchange partner in whom one has confidence”, and to that of Brink and Berndt (2008) who define trust as “the confidence both parties in the relationship have that the other party won’t do something harmful or risky’’. All these definitions highlight the importance of trust as a confidence booster and a risk mediator in business transactions.

Trust is also defined as the reliance by a trustor, for example, a bank customer, on a trustee who can be the bank, in situations where there are uncertainty and risk (Hurley 2006; 2012). This definition is similar to other definitions of trust in marketing: confidence in a partner (Morgan and Hunt, 1994), confidence in the performance of a partner (Doney and Cannon, 1997), and reliance on brand performance (Chaudhuri and Holbrook, 2001). Anderson and Narus (1990:45) define trust based on the perceived outcomes of trust as “the firm's belief that another company will perform actions that will result in positive outcomes for the firm as well as not take unexpected actions that result in negative outcomes”. Morgan and Hunt (1994) suggest that the level of trust increases if there are congruent values and effective communication and, on the contrary, the level of trust decreases if there is a perception of opportunistic behaviour between partners.

Trust is also defined as a motivation, outcome, value or even attitude (Salam, Iyer, Palvia and Singh, 2005). Trust is further described as a behavioural outcome based on the evaluation of trustworthiness (Mayer and Davis, 1999). This description of trust is particularly relevant to the study context as one of the outcomes of trust investigated in the study is customers’ behavioural intentions based on their trustworthiness perceptions towards their banks. Other authors define trust as a willingness to engage in risky behaviour based on the belief and reliance on one’s partner to fulfil anticipated obligations (Palmatier, Scheer and Steenkamp, 2007). Blackburn, Carey, and Tanewski (2010) identified a number of definitions containing the majority of elements relating to trust that can facilitate proper conceptualisation and measurement of trust as:

- A willingness to engage in relationships that are risky;
- A willingness to be vulnerable in order to develop a relationship with another party;
- A belief that that one’s vulnerability will be not taken advantage of by the other party; and
- A network of behaviours, communication channels and ties that facilitate interactions.

However, most of the definitions found in the literature do not specify factors that can be regarded as contributing to the willingness to participate in risky behaviours, nor do they identify strategies that organisations can implement as a measure to gain customers’ trust. Thus, the majority of the definitions focus more on building trust and less attention is paid to definitions that focus on developing a trustworthy image. For instance, Morgan and Hunt (1994) suggest that organisations have the ability to improve consumer trust through increased communication efforts as well as avoiding opportunistic behaviours and uncertainty. However, the same authors fail to identify factors that lead to a trustworthy image although

there is evidence in literature that trustworthiness perceptions towards an organisation lead to the development of trust (Kharouf, lund and Sekhon, 2014).

In their definition of trust, McKnight and Chervany (2001) identify different aspects of trust that include institution-based trust, trusting beliefs, a disposition to trust, and trusting intentions, as aspects that lead to trust-related behaviours. However, despite all the different perspectives and dimensions of trust identified in the literature, there is a common understanding that trust refers to mutual confidence that a party to an exchange will not exploit another's vulnerabilities (Huff, 2005; Sabel, 1993). From a financial services perspective, the definition of trust put forward by Ennew and Sekhon (2007:63) in which they state that "[t]rust is individuals' willingness to accept vulnerability on the grounds of positive expectations about the intentions or behaviour of another in a situation characterised by interdependence and risk" is considered to be more applicable to this study as banking transactions involve taking risks in anticipation of fulfilment of obligations on the part of the service provider.

This study positions trust in the banking context as the belief by consumers, based on their interactions with the banks, that banks are trustworthy, dependable, observe rules and regulations and act in the best interest of the customer. Table 2.3 below summarises definitions of trust that are regarded to be relevant to this study.

Table 2.3: Summary of Definitions of Trust Relevant to the Financial Sector

DEFINITION	SOURCE
"Trust is individual's willingness to accept vulnerability on the grounds of positive expectations about the intentions or behaviour of another in a situation characterised by interdependence and risk".	Ennew and Sekhon (2007:63)
"Willingness of a party to be vulnerable to the actions of another party based on the expectation that the other will perform a particular action important to the trustor, irrespective of the ability to monitor or control that other party"	Mayer et al. (1995:712).
Willingness to accept vulnerability and or rely on an exchange partner in whom one has confidence.	Dwyer et al. (1987
Willingness to rely on an exchange partner in whom one has confidence.	Moorman *et al.* (1992)
Willingness to be vulnerable in order to develop a relationship with another party	Blackburn, Carey, and Tanewski (2010)
Willingness to engage in risky behaviour based on the belief and reliance on one's partner to fulfil anticipated obligations	Palmatier, Scheer and Steenkamp (2007)
Willingness to believe that another company will perform actions that will result in positive outcomes for the firm as well as not take unexpected actions that result in negative outcomes	Anderson and Narus (1990)
Willingness to have confidence in an exchange partner's reliability and integrity.	Morgan and Hunt (1994)

Source: Adapted from various authors for the study as detailed in the table.

An analysis of the definitions in Table 2.3 point out to a consensus among the authors in that trust is voluntary as it is a willingness:

- to be reliant on another party;
- to accept certain risk;
- to develop mutual dependence;
- to accept vulnerability; and
- to relinquish some independence.

2.5.1 Antecedents and Outcomes of Trust

Research has concluded that trust is belief-based and it develops over a period of time as a result of repeated experiences (Büttner and Göritz, 2008; Caldwell and Clapham, 2003). Similarly, Hardin (2002) argues that trust is established between a trustee and a trustor in the course of ongoing interpersonal relationships between these two parties, because customers only accumulate adequate evidence to form trusting perceptions based on their interaction with a service provider. Thus, trust is long-term in nature and develops based on an exhibition of trustworthy behaviours.

Many researchers have investigated the concept of trust in different contexts with varying conclusions on what factors can be regarded as influential in the development of trust. However, the determinants of trust mostly found in the literature are reliability, competence, benevolence, credibility, honesty and quality (Kantsperger and Kunz, 2010; Sirdeshmukh, Singh and Sabol, 2002). Similarly, Heffernan, O'Neill, Travaglione and Droulers (2008) concluded that credibility, integrity and benevolence influences trust positively. Doney and Cannon (1997) argue that trust is a single construct involving trustworthiness, ability, benevolence and integrity. Channel studies mostly view honesty and benevolence as two sided but intertwined parts of the concept of trust (Geyskens, Steenkamp and Kumnar 1998). Wong, Cheung and Ho (2005) investigated factors that influence successful partnering between consultant groups and developers and concluded that permeability, relational bonding, and system-based trust and performance influenced the success of the partnering. Liu and Wu (2007) investigated the mediating role that trust and satisfaction play in the relationship between cross-selling and customer retention (service attributes) in a banking industry context. The study concluded that reputation and expertise positively impacted on trust, trust was also found to positively impact on both cross-selling and customer retention.

With regard to customer behavioural intentions as an outcome of trust, Dovalienơ, Gadeikienơ and Piligrimienơ (2007) investigated the role of trust in influencing long-term relationships in

the odontology services sector. The study concluded that trust is pivotal in influencing customers' behavioural intentions to engage in a long-term relationship with a service provider. A strong positive correlation was also found between trust and its determinants and behavioural intentions (Dovalieno *et al.,* 2007). In a more recent study, Kharouf, Lund and Sekhon (2014) revealed that trustworthiness of a service provider leads to trusting a service provider which, in turn, positively influences behavioural loyalty. Figure 2.1 below summarises the antecedents and outcomes of trust.

Figure 2.1: Antecedents and outcomes of trust

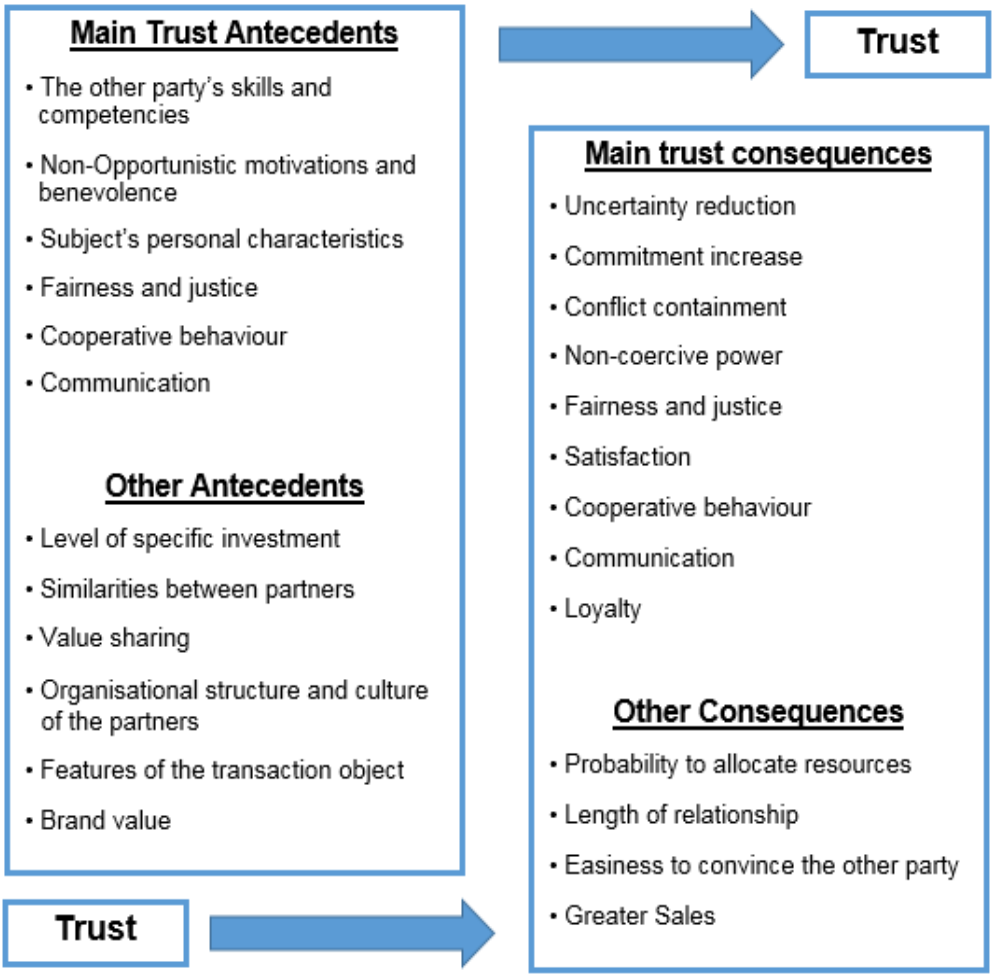

Source: Adapted from Castaldo, (2007) and Kharouf, (2010).

As depicted in Figure 2.1, the main determinants of trust according to Castaldo (2007) and Kharouf (2010) are:

- Past experiences when dealing with an exchange party;
- An evaluation of the trustee's skills and competencies;
- An evaluation of benevolence concerns; and

- The trustor's integrity perceptions of the trustee.

These trust antecedents will, in turn, result in uncertainty reduction, trustor's commitment, trustor's satisfaction, effective communication between trustor and trustee and trustor's loyalty as well as encouraging cooperative behaviours between trustor and trustee.

2.6 CONCEPTUALISING TRUSTWORTHINESS

Marketing literature identifies trust as an attribute of the relationship between exchange partners and trustworthiness as an attribute of the individuals involved in the exchange (Barney and Hansen, 1994). Thus, trustworthiness differs from trust in that trustworthiness is a characteristic of a potential trustee (a bank which may be trustworthy or not), while trust entails beliefs held by someone else regarding that trustee (bank customer), (Kharouf *et al.*, 2014). Similarly, Corritore, Kracher and Wiedenbeck *(*2003) differentiate trust from trustworthiness by stating that trust is the trustor's psychological state, while trustworthiness is a characteristic of the trustee. Bews and Rossouw (2002:372) define trustworthiness as "the trustor's (trusting party's) evaluation, based on certain facilitators, of the likelihood of the trustee (focus of trust) acting in her or his interests in a situation entailing risk". This definition is relevant to the context of this study because of the heightened element of risk involved in banking transactions (Gillespie and Hurley, 2013).

Huff (2005) defines trustworthiness "as a characteristic of the trustee, or the object of one's trust." Huff (2005) further suggest that trustworthiness is based on customers' belief that the service provider will act fairly and not engage in behaviours that are regarded as exploiting the vulnerabilities of the customer. Barney and Hansen (1994) also suggest that an exchange partner is trustworthy only if he/she avoids exploiting the vulnerabilities of the other party. Thus, trust is earned through the exhibition of trustworthy behaviours and it is based on an evaluation of various trustworthiness determinants that include benevolence, ability and integrity. In addition, Chong, Yang and Wong (2003) suggest that consumers form trustworthiness perceptions based on their evaluation of a service provider's ability and motivation to provide the promised services. Thus, in order to be considered trustworthy, an organisation is expected to be consistent in honouring promises over a period of time (Chong *et al*., 2003). This also implies that parties to a business transaction take an incremental risk based on cumulative delivery of promised goods or services.

Consistent with Caldwell and Clapham (2003), who define trustworthiness as behaviours exhibited by a service provider that instil confidence in a customer, McKnight, Choudhury and Kacmar (2002) describe trustworthiness as an accumulation of perceptions by one party that another party will maintain one's trust. Similarly, Büttner and Göritz (2008) define perceived

trustworthiness as the belief-based trust in an organisation, while Moorman *et al. (*1992:315) suggest that trusting beliefs represent a "… sentiment or expectation about an exchange partner's trustworthiness". Thus, in relationships such as those between a bank and its customer, the customer relies on the honourable intentions of the bank to perform services satisfactorily and in the best interest of the customer. Hardin (2002:28) argues that those who are trustworthy honour their commitments to others; in other words, "… your trustworthiness is your commitment to fulfil another's trust in you". Additionally, Caldwell and Jeffries (2001:6) define interpersonal trustworthiness as "the subjectively perceived point on a continuum at which an individual's behaviours are perceived as complying with the ethical duties considered to be owed to the person who is making the decision to trust". In the context of this study, this implies that customers can only trust banks that are trustworthy and compliant as they are expected to fulfil their obligations to customers.

Mayer *et al.* (1995) define trustworthiness as an attribute of a trustee who is responsible for trust. Caldwell and Clapham (2003) state that trustworthiness is an accumulation of perpetual experiences that results in placing one's trust in another party or an entity. They also suggest that interpersonal trustworthiness is subjective in nature and helps in understanding why two people differ in their opinions as to whether to trust a person or not. Similarly, Bews and Rossouw (2002) determined that trustworthiness of a service provider facilitates the accumulation of perceptions of trust which will then determine relationship outcomes. The above discussion highlights that an exchange partner is trustworthy only when it is worthy of the trust of others and that proper conceptualisation of trustworthiness takes into account the accumulation of positive experiences leading customers to trust a service provider. However, Mayer *et al.* (1995) seem to have a contradictory view as they suggest that trustworthiness perceptions will not automatically lead to positive relational outcomes.

Surprisingly, even though the role of trustworthiness is acknowledged in most relational marketing conceptualisations, the majority of researchers mainly focus on measuring trust as stated by Hardin (2002:29), "[...] much of the literature on trust hardly mentions trustworthiness, even though implicitly much of it is primarily about trustworthiness, not about trust". Failure to concretely establish the role of trustworthiness may create challenges for organisations like banks that aim to develop lasting relationships with their customers, as they lack guidance as to which determinants of trustworthiness has the greatest influence on customer decision to trust a bank (Fang, Palmatier, Scheer and Li, 2008). Bews and Rossouw (2002) also state that trust is mostly taken for granted, yet there is a need for organisations to build trust by focusing on factors that facilitate trustworthiness which is the objective of this study. Given this lack of research on the role of trustworthiness, it suffices to conclude that

there is a need for more studies that focus on how trustworthiness develops (Vanhala, Puumalainen and Blomqvist, 2011), which is the objective of this study.

Based on the literature reviewed, it appears that there is inconsistency in the conceptualisation and understanding of what constitutes trustworthiness. Consistent with the definition of trustworthiness by Caldwell and Clapham (2003), this study conceptualises trustworthiness of a service provider, in this instance, the bank, as the ability to foster a conducive business environment that allows the consumer to accumulate perceptual experiences that translate into trusting the bank. This study also takes the position that trustworthiness of an organisation is important, particularly in the banking industry because of the inherent risk element that is associated with banking (Gillespie and Hurley, 2013). Further, trustworthiness acts as a mediator that translates into consumer trust (Kharouf *et al*., 2014). Thus, banks are able to strategically influence the perception of their trustworthiness in the minds of their customers; hence, the likelihood of building customer trust is enhanced through the exhibition of trustworthy behaviours by the service provider (Kharouf *et al*., 2014). Roy and Shekhar (2010b) identified six determinants of trustworthiness of banks as expertise and ability, customer orientation, integrity and honesty, communication, similarities and shared values. The antecedents of trust (reliability, integrity, credibility, benevolence, shared values and ability) are classified as trustworthiness beliefs, which are the “underlying mechanisms through which consumers of services develop trust in their service providers” (Shainesh, 2012: 267).

2.7 DIMENSIONS OF TRUST

2.7.1 Broad Scope Trust

Broad scope trust comprises of both generalised trust and system trust. Generalised trust is the trust one places in the average person one meets in a given situation. From a financial services context, broad scope trust develops in the minds of the consumers based on formalised regulations governing an industry in which financial services organisations like banks operate in (Grayson, Johnson and Chen, 2008). Part of the general trust is trust at a national level. This is trust related to business relations, the government and the public sector, and is based on values, norms and codes of conduct that exist within a society (Welter and Smallbone, 2011). This type of general trust is important as it also entails how trust is influenced by the political and legal system in a country (Luhmann, 2000). If residents of a country lack trust in their government, this may result in negative support from the public sector of policies that a government implements to ensure economic development in a country (Luhmann, 2000). In the context of this study, system trust can be regarded as consumer trust

emanating from knowing that there is a regulatory system in place such as the central bank of a country. The perpetual closure of banks in Zimbabwe during the past two decades prompted the inclusion of structural assurance (regulatory framework) as one of the study constructs to be investigated, because it has an impact on system trust. System trust is also referred to as institutional-based trust (Zucker, 1986).It is further discussed below because of its relevance to the current study context.

2.7.2 Institutional and Inter-Organisational Trust

In terms of the sociology of trust theory, Möllering (2001) suggests that trust can emerge in a variety of forms, including inter-organisational and institutional trust. Organisational trust is pivotal in repairing broken relationships by ensuring certainty and enhancing confidence (Anderson and Narus, 1990). Institutional-based trust in sectors like banking is mostly based on accepted, implicit rules that regulate practices in the banking industry (Bachmann, 2001). Thus, institutional trust is regarded as a necessity in financial markets and inter-organisational trust is regarded as a complementary managerial resource that is also crucial in the establishment of successful relationships (Morgan and Hunt, 1994). Additionally, inter-organisational trust is regarded as a successful customer-relationship component that is a result of prior exchange (Gulati and Nickerson, 2008) and inter-organisational behaviour affects the trust-risk relationship (Möllering, 2001). Gillespie and Dietz (2009) argue that trust at the organisational level is a result of an evaluation of an organisation's reliability and ability in discharging its responsibilities as well as its ability to show a caring attitude for the other party, while also adhering to accepted business morals that include fairness and honesty.

In the RM literature, researchers have argued that trust and opportunism are exclusive and incompatible values (Mukherjee and Nath, 2003; Wathne and Heid, 2000). This view suggests that in a business relationship, one party may behave opportunistically if she /he is aware that the other party trusts him/her (Gill, Flaschner and Shachar, 2006; Williamson, 1993). Thus, RM positions trust as a managerial resource used to mitigate the inter-organisational uncertainty (Morgan and Hunt 1994). Trust in financial institutions is rooted in institutionalised norms, procedures and rules (Bachmann, 2001; Luhmann, 1988). Further, institutional-based trust is important, because banks represent "complex expert systems" (Gillespie and Hurley 2013:5) and, therefore, there is a need for mechanisms (rules and regulations) that guide the operations of banks in order to motivate customers to do business with banks since they provide a form of guarantee that the financial sector is safe and efficient (Gillespie and Hurley, 2013). From a banking perspective, these mechanisms include central banks, laws to protect investors' assets within banks, accepted standards for registration and licensing of banks,

accounting standards and third-party auditing of the banks in addition to enforcement of laws and penalties (Nienaber *et al.,* 2014). However, consumers can only trust such mechanisms if they have confidence in them (Zucker,1986), a clear indication that security and safety mechanisms put in place must be seen to be doing what they are supposed to do in order to boost consumer confidence. The power of institution-based trust was best put into perspective by Mahadevan and Ventakesh (2000:10) who argue that "when vendors do not support fair information practices and enforcement mechanisms when addressing users' privacy and other concerns, the legal framework could play a vital role in regulating the industry and restoring confidence in the minds of customers". Therefore, it is important to understand the important factors that constitute trust and confidence in the financial sector (Nienaber *et al.,* 2014).

2.7.3 The Cognitive-Based Trust Dimension

Johnson and Grayson (2005) suggest that consumer-level trust comprises of both cognitive and affective dimensions. According to Morrow, Hansen and Pearson (2004:53), cognitive-based trust develops when "One party assesses the trustworthiness of another party by weighing the evidence embedded in both the attributes of the transaction and the characteristics of the other party(s) to the transaction". Similarly, cognitive-based trust is described as the trustworthiness perceptions of an exchange partner influenced by the other partner's dependability, competence and reliability (McAllister, 1995). McAllister (1995) also differentiated between affect-based trust and cognitive-based trust by stating that cognitive-based trust is concerned with the reliability and ability of a service provider whereas affective-based trust is concerned with benevolence and openness. Castaldo (2007) regards cognitive trust as a mutual learning process which is embedded in the competence and knowledge of the other exchange partner that rationalises the desire to trust.

Some researchers argue that trust develops over time, but, if cognitive cues that include competence and ability are evident, trust can develop more rapidly and at a higher level (Kim and Tadisina, 2004). There is also evidence that cognitive trust facilitates commitment to a relationship (Johnson and Grayson, 2005). Korczynski (2000) further suggests that cognitive trust has some similarities to the concept of economic theory in that consumers calculate benefits that arise from their interactions with the service provider and on the basis of the service provider's reputation and the cost associated with the goods. Thus, trust is associated with anticipated benefits in relationship to the transaction cost. Consistent to the conceptualisation of cognitive-based trust by Johnson and Grayson (2005), this study argues that cognitive trust is based on the willingness of a bank customer to believe that a bank will

fulfil its obligations efficiently, this belief is based on prior knowledge of the bank's ability and reliability to service the customer.

2.7.4 The Affective-Based Trust Dimension

Castaldo (2007: 157) states that "Affective trust is based on strong mutual feeling between parties to a relationship, essentially it is based on the emotional links between the dyadic entities in the relationship". Rempel *et al.* (1985) define affective-based trust in relation to the confidence an exchange partner has in a partner as a result of feelings and emotions arising from empathy and concern for the partner generated during the course of their interaction. Similarly, affective-based trust is about emotional investment in a particular relationship by demonstrating a caring attitude towards an exchange partner in the hope that the other partner will reciprocate the same behaviours (McAllister, 1995). The emotional bond between the partners in an exchange relationship is the driver of the relationship and helps to nurture a mutually beneficial relationship (Nicholson, Compeau and Sethi, 2001) that is open and free from the fear of one's vulnerability. Thus, the affective- based trust dimension is based on intentions, emotions and motives of a partner rather than the actual behaviour (Huemer, 1998).

From a marketing perspective, affective-based trust is demonstrated by certain behaviours that show how dependable exchange partners are, especially in circumstances where one partner is vulnerable and relies on another partner to do good (Moorman *et al.,* 1993a). Affective-based trust is also described as "feelings of security and perceived strength of the relationship" (Johnson and Grayson, 2005:501). From the above discussion, it is clear that affective-based trust is about taking a "leap of faith" as it is mostly based on emotions and feelings that do not necessarily always rise from normal reasoning and knowledge (Möllering, 2006:191).

Morrow, Hansen and Pearson (2004) concluded that positive affective trust is essential in influencing positive trustworthiness perceptions towards the other party as it projects non-opportunistic behaviours. Furthermore, the emotional bonds created through affective-based trust serves to strengthen and reinforce the economic and structural bonds (Nicholson *et al.*, 2001). Empirical evidence also supports the notion that affective-based trust displayed through shared values, politeness and empathy (benevolence trust) positively impacts on trust in situations where exchange partners have no prior established relationship (Coulter and Coulter, 2003). This study positions affective trust as confidence in the future outcomes of a relationship on the basis of care and concern shown by the bank towards its customers, this view is similar to that of Johnson and Grayson (2005).

2.8 TRUST AND TRUSTWORTHINESS IN THE MARKETING DISCIPLINE

The concept of trust has gained importance in developing successful customer RM programs (Kantsperger and Kuntz, 2010). From a marketing perspective, trust has been researched in varying contexts, for example, in commercial relationships (Guenzi and Georges 2010), in the financial sector (Roy *et al.,* 2011; Nienaber *et al.,* 2014), in the hotel sector (Kharouf, 2010; Kharouf *et al.,* 2014), and in buyer-seller relationships (Doney and Cannon, 1997). In marketing literature, trust is well recognised as fundamental to building relationships (Kharouf *et al*., 2014; Morgan and Hunt, 1994). Furthermore, there is a common understanding that trust is based on mutually beneficial relational exchanges in the marketplace (Gundlach and Cannon, 2010; Shim *et al.,* 2013). However, even within the marketing discipline, there is no one universally-applied definition of trust (Rousseau *et al.*, 1998). This implies that trust is a multidimensional concept which can mean different things to different people based on the study context. For example, while some researchers regard trust as necessary if there is heightened risk in circumstances where a partner is likely to be short-changed should the other partner fail to fulfil his/her obligations, (Deutsch, 1958), other researchers focused on building inter-organisational trust (Fang, Palmatier, Scheer and Li, 2008), the multi-dimensionality of trust (Sekhon *et al.,* 2013), and signalling trustworthy behaviours in order to be trusted (Kharouf *et al.,* 2014; Nienaber *et al.,* 2014; Hurley and Waqar, 2014).

Even though researchers agree that trust is a multidimensional construct, there is still no consensus on the actual elements that constitute trust and distrust (Lewicki, McAllister and Bies, 1998). For example, Johnson and Grayson (2005) conceptualises trust as having cognitive and affective dimensions in financial service exchanges, while Roy and Shekhar, (2010a) identified customer orientation, integrity and honesty, communication and similarity, shared values, expertise, and ability and consistency as first-order factors for determining trustworthiness of retail bankers. To add to the complexity, Dimitriadis and Kyrezis (2008) revealed two dimensions of trust, affective and cognitive trust, and three variables that forms trust as: trust in the company, reputation of the company and disposition to trust from a retail bank perspective.

As highlighted above, there are different meanings and uses within the trust domain and a general tendency by researchers to operationalise trust differently in various studies, further highlighting the complexity involved in studies linked to trust. Mayer *et al.* (1995) identified five pertinent issues that best explain challenges that marketing researchers encounter in conceptualising trust:

- The different meanings ascribed to the concept of trust leading to complexity in defining it universally;
- Lack of a consensus on the antecedents that lead to trust;
- Vagueness arising from the establishment of the correlation between trust and the associated risk;
- Confusion in levels of analysis due to the lack of specificity of trust referents; and
- Lack of literature that clearly identifies attributes and behaviours of both parties (the trustor and trustee) that are regarded as trustworthy.

The above discussion clearly illustrates that there is a lack of synthesis in trust research in the marketing field mainly due to the multi-dimensionality of the concept of trust. However, there are still common areas of understanding within the trust domain (Rousseau *et al.*, 1998). Among them is the universal belief that trust positively influences cooperative behaviours between partners in an exchange (Gambetta, 1988) and that risk and uncertainty are critical conditions for the need to explore the concept of trust (Rousseau *et al.,* 1998).

2.9 TRUST AND TRUSTWORTHINESS IN THE BANKING SECTOR

A well-developed financial system plays a pivotal role in the economic prosperity of a country by acting as a catalyst in a financial system as it mobilises financial resources from the savers to the investors, thereby facilitating growth in an economy (Beck *et al.*, 2005). In addition, trust is of considerable importance in the banking sector where some of the services are complex and intangible. Therefore, trusting the service provider helps to mitigate the perceived risk usually associated with financial transactions (Ennew and Sekhon, 2007). Similarly, Edelman (2013) and Gillespie and Hurley (2013) argue that, from a financial services context, the element of risk is heightened, arguably making trust more significant than in other sectors. Effectively, trust mitigates the uncertainty inherent in an exchange relationship, especially in the context of the banking sector where the perceived high risk involved in service transactions means that an element of trust is even more crucial in developing and maintaining business relationships (Roy, Eshghi and Shekhar, 2011). Similarly, the element of trust is particularly important in the banking industry because economic transactions involve risk (Mukherjee and Nath, 2003; Kesharwani and Bisht, 2012). Stiglitz (2010) views the modern banking system as having no responsibility to persons or communities and under such circumstances, a lender and a borrower have no personal relationship, implying that trust must become the glue that cements the relationship between exchange partners.

During the 2008 global financial crisis, trust was a common word in newspaper headlines and in discussions among political leaders and financial experts. For example, commenting on the financial crisis in 2008, Nobel economist, Stiglitz (2008) suggested that the financial crisis was mainly caused by a catastrophic collapse in confidence. Similarly in giving his opinion on the problems affecting the financial markets in 2008, former US Labour Secretary, Reich (2008), concurred with this opinion by stating that, the cause of the problem was not unavailability of capital but by lack of trust. He went further to suggest that, in the absence of trust, Wall Street might be non-existent. Given the above comments, trust appears as a correlate of a viable financial system and confidence in a financial system can also be regarded as a crucial factor in the transition and prosperity of an economy considering that a viable banking sector is integral to a sound economy (Gillespie and Hurley, 2013).This implies that having confidence and trust in the certainty of an economic system as well as having confidence and trust in the integrity of the financial system is of great importance for the prosperity of a country (Castelfranchi and Falcone, 2010).

Trust has been empirically studied from a financial services perspective in different contexts; for example, Kantsberger and Kunz (2010) focussed on connecting consumer trust to risk; Coulter and Coulter (2003) investigated trust from a business to business perspective; Santos and Basso (2012) investigated how consumer trust is connected to recoveries and complaints; Roy *et al*. (2011) investigated the dimensions of trust and trustworthiness in retail banking; Shim *et al.* (2013) concluded that self-reported wellbeing influences consumers' level of trust in a banking institution; and Sunikka *et al.* (2010) revealed that trust is influenced by consumer capability. This implies that the more knowledgeable consumers become in their financial activities, the less likely they are to trust a bank.

Other studies related to the service industry suggest that trust is important in fostering long-term relationship (Kharouf and Sekhon, 2008; Ndubisi, 2006). More significantly, Liu and Wu (2007) revealed the service attributes perceived as important in the literature (such as location convenience and a firm's reputation) become of less significance once trust and satisfaction are applied as mediating variables. The implication of this finding is that customers who are satisfied and/or believe that their service provider is trustworthy, place less value on service attributes. Additionally, some studies concluded that trustworthiness of a service provider positively influences the trust that customers have in an organisation (Caldwell and Clapham, 2003; Ennew and Sekhon, 2007; Kharouf, 2010). Furthermore, it was also established that trustworthiness impacts positively on behavioural and attitudinal loyalty (Kharauf and Sekhon, 2009, Kharouf *et al.,* 2014). Thus, loyal customers are more inclined to exhibit behavioural

loyalty by recommending the service provider to others which is likely to result in increased profits on the part of the service provider (Reichheld, 2003; 2006).

In recent studies on trust in the financial and services sectors, Nienaber *et al.* (2014) concluded that customers' perceptions of an organisation's compliance and conformity with the laws and regulations is important in restoring trust and confidence in the financial sector, among other factors. Nienaber *et al.* (2014) also concluded that regulation, reputation, customer satisfaction and shared values are very influential factors for trust within financial services organisations while communication was found to have less significance in influencing trust. In a study done by Kharouf *et al.* (2014) on the influence that a service provider's trustworthiness has in influencing consumer trust and the subsequent impact on behavioural and attitudinal loyalty, the authors concluded that trustworthiness is a mediator that links retail strategies and the development of trust. The study also revealed that consistency, competence, integrity, benevolence, communication and value alignment all had a significant influence on the trustworthiness of a service provider (Kharouf *et al.,* 2014). A study done by Sekhon, Roy, Shergill and Pritchard (2013) on the multidimensional nature of trust in a service industry concluded that cognitive trust does not significantly impact affective trust, but trust impacts both cognitive and overall trust. Johnson and Peterson (2014) determined that there was a desire among many retail financial institutions to re-personalise their relationships with customers following the 2008 financial crisis and that more research was needed to provide guidance to managers on how the mention of regulatory oversight may be used strategically in a financial crisis.

Järvinen (2014:551) examined the content of consumer trust in the banking sector by comparing consumer trust in banking and distinct banking services in 29 European countries. The study revealed "deviations between various banking services and company-level results regarding consumers' trust in their banking relationships". The study also revealed demographic deviations in trust. Hurley, Gong and Waqar (2014:361) used a stakeholder trust model of organisations to diagnose the loss of trust in large banks after the global financial crisis. They concluded that "building a high-integrity trust ecosystem among customers, employees, suppliers, investors, and regulators requires the deep embedding of core elements of trustworthiness into the social and operating processes of the bank". They also argued that building trustworthy banks is essential to social and economic progress. da Silva Terres, dos Santos and Basso (2015) concluded that in the course of business interactions, affective aspects have greater impact on consumer trust in situations of high-consequence than in low-consequence exchanges, while cognitive aspects have greater impact when consequences are low than when they are high.

Based on the analysis above, it can be concluded that it is important for customers to trust the stability of the banking industry, because without trust, customers become hesitant to let banks handle their finances and customers are less likely to remain loyal to brands when trust erodes (Dia, 2011). “Low levels of trust may indicate serious problems in the markets and it should be a signal to bank managers to take actions” (Järvinen, 2014:551). Thus, in a banking context, trust and implicit agreements are important managerial strategies designed to mitigate uncertainty (Pfeffer and Salancik, 2003).

2.10 DECIDING TO TRUST OR NOT TO TRUST

Given the importance of trust in all aspects of business relationships, it is important not only to understand how trust develops, but also how consumers make the decision to trust or not to trust. It is also important to understand the cognitive process taking place in consumers’ minds when they decide to trust or not to trust (Blomqvist 2005). Trust is also regarded as a cognitive evaluation of the trustworthy behaviours exhibited by a service provider based on previous behaviours, that leads both parties to consider continuing cooperation and future activities (Čater and Žabkar, 2009). Trust is knowledge-driven, hence, inadequate knowledge may negate trust (McAllister, 1995). It can therefore be concluded that the decision to trust is driven by available knowledge and “good reasons” to trust (Mayer *et al.,* 1975:73). Researchers argue that trustworthiness mediates the link between customer perceptions of trust and trust (Bews and Rossouw, 2002; Caldwell and Clapham, 2003). Thus, “without first developing a trustworthy image, service organisations will find it challenging to build trust” (Kharouf *et al.,* 2014:363).

Dwyer *et al.* (1987) suggest that the trust development process goes through multiple stages and that trust beliefs can develop early in a relationship, if partners are able to consistently demonstrate behaviours linked to trustworthiness such as consistency, shared values and benevolence. Similarly, Hardin (2002) suggests that trustworthy organisations follow through on their commitments to their customers and trust only materialises if it is complemented by trustworthy behaviours. Coulter and Coulter (2003) suggest that trust is a process based on taking incremental risks. Thus, trust evolves and deepens over time, and when trustworthy behaviours are being signalled, the interdependence between the exchange partners gradually increases to the extent that both parties rely more on each other, leading to mutually beneficial relationships (Kumar, Scheer and Steenkamp, 1995). However, a potential trustee may take risks early in the relationship to signal to the trustor that they are willing to participate in mutually beneficial exchanges (Kharouf *et al.,* 2014). Barney and Hansen (1994) classify trust into three categories ranging from weak-form trust, semi-strong trust and strong-form

trust. They further highlight that trustworthiness materialises when there is a strong form of trust between the exchange partners. The strong form translates to trustworthy behaviour that can also be regarded as a source of competitive advantage for organisations (Barney and Hansen, 1994).

Caldwell and Clapham (2003) developed a framework of trustworthiness as a mediating lens that is widely recognised in many trust studies. As depicted in Figure 2.2 below, they suggest that a party to an exchange arrives at a decision to trust the other party based on an appraisal of behaviours demonstrated by the party that is to be trusted.

Figure 2.2: Mediating lens framework

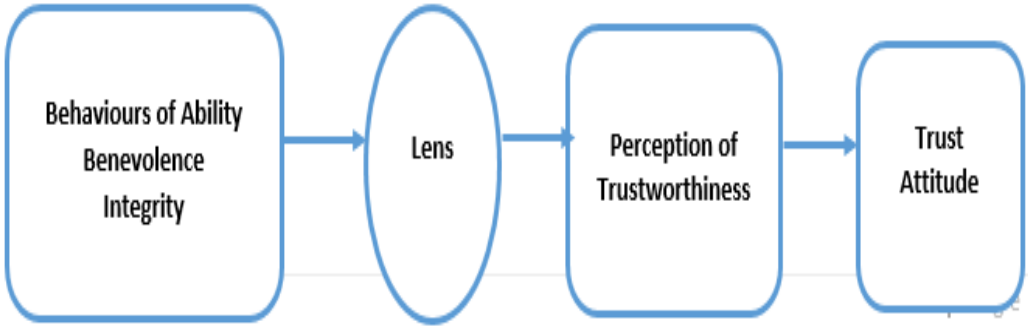

Source: Adapted from Caldwell and Clapham (2003) and Kharouf *et al,* (2014:363).

Caldwell and Clapham (2003) further suggest that the decision to trust goes through a mediating lens which facilitates the process in which each individual makes decisions about their surroundings and in the process, enables people to make certain trustworthy perceptions. Caldwell and Clapham (2003), seem to suggest that the decision to trust is individually conceptualised and it is based on the perceptions that a particular individual has about another party or in the context of this study, a service provider. Thus, Caldwell and Clapham (2003) suggest that the decision to trust has to pass through a trustworthiness filter and that one has to exhibit trustworthy behaviours in order to gain the trust of the other party. However, their study fails to specify the exact steps one should take to develop trustworthiness begging the question “What characteristics and behaviours signal to a partner that an exchange partner is trustworthy?” (Kharouf *et al.,* 2014:363). Therefore, consistent with Kharouf *et al,* (2014), the main motivation behind the current study is to try and identify which of these characteristics and behaviours signal to a consumer that a bank is trustworthy.

2.11 THE KNOWLEDGE GAP

Yee, Yeung and Edwin Cheng (2010) argue that, despite the fact that trust is highly regarded as an essential element in every business relationship, the interest in studies concerning consumer trust has grown only recently, especially in the financial markets. Similarly, Shim *et al*. (2013) also state that, in general, too little has been researched about how consumers develop trust in banks and other financial institutions. An analysis of the literature reviewed also revealed that while there are studies focusing on consumer trust (Doney, Barry and Abratt, 2007; Doney and Cannon, 1997; Nienaber *et al.,* 2014; Morgan and Hunt, 1994), there is still limited research done that focusses on conceptualising trustworthiness of a service provider in relation to consumer trust. Thus, a number of studies have examined the multidimensional nature of trust in the services context, but little attention has been paid to identifying the underlying dimensions of trustworthiness (Kharouf *et al.,* 2014).

Hardin (2002:29) reinforces this view by stating that, a signifant number of studies documented in literature fail to recognise the significance of trustworthiness as they primarily focus on conceptualising trust only. In support of the above argument, Bews and Rossouw (2002: 378) argue that: "... where trust refers to the act of trusting or not trusting, trustworthiness entails an evaluation of those criteria that constitute trust and consequently, influences both the direction and intensity of any decision to act in a trusting manner". Caldwell and Clapham (2003) and Hardin (2002) positions trustworthiness as a mediating link between trustworthy behaviours emanating from the service provider and customer trust; however, most of the studies reviewed did not consider the mediating role of trustworthiness (Kharouf *et al.,* 2014). For example, Xie and Peng (2009) concluded that, when organisations experience negative publicity, customer trust can only be gained if there is evidence of sincere behaviours that customers regard as reflecting a trustworthy image. However, Xie and Peng (2009) only measured trust in their study and failed to consider the role that trustworthiness plays which they argue to be pivotal in restoring trust.

The above findings point to the need for more studies geared towards understanding trustworthiness factors that influence consumers' trust perceptions, and to empirically study how these factors materialise in the banking sector. This study tries to bridge that gap by focussing on the dimensions of trustworthiness of a service provider (bank) that are regarded as having the strongest influence on the decision of a customer to trust a bank.

Recent studies on trust provide convincing and compelling arguments for the benefits and the importance of consumer trust for example, (Hurley *et al.,* 2014; Järvinen, 2014; Johnson and

Peterson, 2014; Nienaber *et al.,* 2014; da Silva Terres, dos Santos and Basso, 2015). Notably, some of the current studies are focusing more on the dimensions of trustworthiness that build trust for example (Kharouf, 2010; Kharouf *et al.,* 2014; Roy *et al*., 2011)). However, none of the studies highlighted above cover consumer trust by focusing on dimensions of trustworthiness of a service provider and the resultant relational outcomes in the African continent, specifically in the banking context. This observation is important in that research has identified that trust is often treated as a cultural trait (Orrù, Biggart and Hamilton, 1997; Whitley, 1992), which has a strong bearing on management and organisations.

Similarly, the national culture of a country or specific region has been shown to be important in the context of organisational trust (Zhao, Koenig-Lewis, Hammer-Lloyd and Ward, 2010). Thus, from a business context some cultures, for example, Latin America and Asia are more collectivist in nature, and focus more on activities that develop trust and friendship (Zhao *et al.,* 2010). From a financial services perspective, members in these cultures typically focus their attention on the levels of relationship management (Nienaber *et al.,* 2014). This argument also finds support in Kharouf *et al.* (2014:369) who argue that "… it is unclear how trust may differ in determinants and consequences if investigated across multiple cultures. For example, certain cultural dimensions may impact the relationship between trustworthiness and trust". Similarly, Shim *et al.* (2013) state that consumer trust is influenced by consumers themselves, i.e. their demographics and home country. This study seeks to bridge this gap by providing empirically-tested evidence on the trustworthiness of banks from an African banking industry perspective.

Most recently, Sandaba and Magobeya (2016) provided valuable insights when they examined the determinants of consumer trust in the Zimbabwean financial sector positioning integrity, competence, benevolence, structural assurance and service recovery as antecedents of trust. Their study concluded that benevolence, structural assurance and service recovery had a significant influence on customer trust. However, their study focused on creating trust whereas the current study focuses on the creation of a trustworthy image reflected in behaviours of organisations which leads to trusting an organisation. Hardin (2002:29) proposed that more studies should consider empirically testing the mediating link that trustworthiness plays between organisations' behaviours and customer trust.

According to Dietz and Den Hartog (2006), it is advisable that a holistic measure of trust should focus on both the respondents' trust beliefs as well as their intended actions based on their trust beliefs. This holistic approach is recommended because simply identifying that an organisation's customers perceive it as being trustworthy does not automatically mean that the customers will act on their trustworthy beliefs (Gillespie, 2012). Thus, the inclusion of a

measure to assess the decision to trust as well as the resultant behavioural intentions, provides a more comprehensive analysis of the trust process. This study therefore, further extends the study by Sandaba and Magobeya (2016) and other researchers by investigating the impact of trustworthiness of a service provider on two relational outcomes in banks, affective commitment and behavioural intentions. Additionally, the study links affective commitment to behavioural intentions in the same conceptual framework.

Furthermore, the present study makes use of mixed methods in which both quantitative data and qualitative data are collected and analysed to establish the determinants of bank trustworthiness and the resultant impact on affective commitment and behavioural intentions The study argues that by employing a mixed-methods research approach, multiple sources of data are collected using different methods in ways that reflect complementary strengths and non-overlapping weaknesses. Thus, a mixed methods study provides insights not possible when only qualitative or quantitative data is collected (Johnson and Turner, 2003). Therefore, this study seeks to bridge the gaps identified in related quantitative-oriented studies for example, Kharouf *et al.* (2014) and Sandaba and Magobeya (2016), by further exploring the concept of trust and trustworthiness in the Zimbabwean banking sector using the sequential explanatory mixed method research approach.

An analysis of all the studies mentioned in this study also indicate that the majority of studies pertaining to the financial sector were done post a financial crisis, unlike the current study that is being conducted in the midst of a financial crisis that has led to low trust and confidence levels. Thus, with lingering uncertainty in the Zimbabwean banking sectors, findings from the study can potentially be used by bank managers in setting up financial plans and marketing strategies that promote banking efficiency under an economic environment of financial anxiety.

The importance of reigniting trust and confidence in a country's financial sector cannot be overemphasised. Having confidence in the integrity of the financial system is of great importance for the prosperity of a country (Castelfranchi and Falcone, 2010). Similarly, low levels of trust in a banking sector should prompt bank custodians to take corrective action (Järvinen, 2014).Thus, this study argues that researchers and practitioners should find ways that financial services organisations like banks can rebuild trust in their brands as low trust levels hamper economic recovery when a country is experiencing economic slumps (Hurley *et al.,* 2014), like the current situation in Zimbabwe. The study further argues that bank custodians should evaluate and address factors that make them trustworthy in order to restore consumer confidence and trust. It was, therefore, essential to conduct this study which focuses on how banks can portray trustworthy signals in order to reignite consumer confidence in a

banking sector that is experiencing low levels of trust and confidence. The strong relationship between consumer trust and intentions to purchase, established by Yee, Yeung and Edwin Cheng (2010), further reinforces the rationale of this study.

2.12 CHAPTER SUMMARY

This chapter discussed the concepts of trust and its link to trustworthiness mainly from a financial sector perspective. Trust was found to be a multidimensional construct which is conceptualised differently depending on the research context, and thus there is a lack of synthesis in trust research. The literature also revealed gaps in the trust studies linked to trustworthiness particularly in the banking sector. Further, the literature reviewed also assisted in identifying the essential building blocks of the trust repair efforts by identifying and analysing the key elements of trustworthiness that are regarded as having a positive influence on bank trustworthiness. Therefore, the literature reviewed facilitated the empirical investigation of the underlying factors by which consumers develop trust in banks by focusing on trustworthiness dimensions that have been identified as having a significant influence on customers' decisions to trust a bank in an effort to contribute to the restoration of trust and confidence in a fragile banking industry. The next chapter focuses on the justification of the study constructs used in the conceptual framework and the hypotheses developed.

CHAPTER 3: JUSTIFICATION OF THE CONCEPTUAL FRAMEWORK AND HYPOTHESES

3.1 INTRODUCTION

Following on from the literature reviewed in the preceding chapter, this chapter provides justification of the study constructs adopted in developing the study conceptual framework and the study hypotheses. According to Zikmund and Babin (2007), there is a need for a researcher to base his/her decision on which concepts to measure based on corresponding research questions and hypotheses in a particular study. In other words, this research project must clarify the object of trust that it is concerned with and how individuals relate to it as well as the context in which the trust relationship is experienced.

The literature reviewed earlier in chapter 2 points to a general consensus that trust is a multi-dimensional construct that is viewed differently within the various scientific disciplines (Yee and Yeung, 2010). The literature reviewed also provided evidence of the role trust in mitigating risk associated with financial transactions (Edelman, 2013; Ennew and Sekhon, 2007; Gillespie and Hurley, 2013). Further, the literature reviewed also indicated that different researchers have used different constructs in their studies pertaining to trust and trustworthiness suggesting the differences in their study contexts (Bews and Rossouw, 2002; Caldwell and Clapham, 2003; Ennew and Sekhon, 2007; Kharouf *et al.,* 2014; Mayer *et al.* 1995).

The primary objective of this study is to explore the concept of trustworthiness by investigating trustworthiness dimensions of banks that drive consumer trust in a banking sector that is experiencing a confidence crisis using the Zimbabwean banking sector as a point of reference. The secondary objectives are as follows:

- To determine trustworthiness factors that can be regarded as having the strongest influence on the decision to trust a bank by its customers.
- To examine the influence of organisational trustworthiness on behavioural intentions of its customers.
- To examine the influence of organisational trustworthiness on affective commitment of bank customers.
- To examine the influence of affective commitment on behavioural intentions on the part of the bank customers (a prediction).

The following research questions were formulated**:**

- Which trustworthiness factors can be regarded as having the strongest influence on the decision to trust bank by its customers?
- What influence does organisational trustworthiness have on behavioural intentions of bank customers?
- What influence does organisational trustworthiness have on affective commitment of bank customers?
- What influence does affective commitment have on behavioural intentions of bank customers?

Based on the analysis of the literature reviewed on different models and theoretical concepts, the main trustworthiness dimensions that are considered to be relevant to the development of bank trustworthiness were identified and the study conceptual framework was developed accordingly. Mayer *et al.* (1995:711) suggest that "…one of the difficulties that has hindered previous research on trust has been a lack of clear differentiation among factors that contribute to trust, trust itself, and outcome of trust". This chapter therefore attempts to provide a better understanding of each study variable and justification for its inclusion in the conceptual framework. Further, this chapter also differentiates between factors contributing to trustworthiness perceptions and outcomes of trustworthiness and how all the study constructs are linked together. Table 3.1 below illustrates the relationships between the study constructs that were used to develop the study conceptual framework and hypotheses.

Table 3.1: The relationship between study constructs

Independent factor	Dependent factor	References
Competence	Organisational trustworthiness	Coulter and Coulter (2002), Donney and Cannon (1997), Kramer (1999), McAllister (1995), Xie and Peng (2009).
Integrity (consistency)	Organisational trustworthiness	Bews and Rossouw (2002: 382), Butler and Cantrell (1984), Doney and Cannon (1997), Mayer *et al*. (1995), McKnight and Chervany (2001), McKnight *et al.* (1998), Xie and Peng (2009) Zucker (1986).
Benevolence	Organisational trustworthiness	Butler and Cantrell (1984), Gefen et al. (2003), Hart et al. (1989) Mayer *et al.* (1995), Doney and Cannon (1997), McKnight *et al.* (1998), Rempel and Holmes (1981),
Value alignment	Organisational trustworthiness	Coulter and Coulter (2003), Dwyer et al. (1987), Gill *et al.* (2006), Hofstede (2001), Morgan and Hunt (1994).
Communication	Organisational trustworthiness	Anderson and Narus (1990), Dwyer *et al.*, (1987), Mukherjee and Nath (2003), Morgan and Hunt (1994), Roy *et al.* (2011), Smith and Barclay (1997).
Structural assurance	Organisational trustworthiness	Al-Ghamdi, Sohail, and Al-Khaldi (2007), Alvarez, Barney, and Bosse (2004), Broaddus (1994), Das and Teng (1998), McKnight *et al.* (2002:304), Niemeyer (2006)

Independent factor	Dependent factor	References
Organisational trustworthiness	Affective commitment	Butler and Cantrell (1984), Morgan and Hunt (1994), Rempel and Holmes (1981).
Organisational trustworthiness	Behavioural intentions	Ladhari (2009), Ozdemir and Hewett (2010), Podnar and Javernik (2012:146). Wilson *et al.* (2012), Zeithaml *et al, (*1996).
Affective commitment	Behavioural intentions	Čater and Žabkar (2009), Gruen, John and Frank (2000), Jin, Lee and Cheung (2010), Snyder and Cistulli (2011), Wang and Datta (2006).

3.2 MEASURING TRUST AND TRUSTWORTHINESS

The literature reviewed identified a number of studies that have attempted to determine the antecedents of trustworthiness. An analysis of these studies revealed the measurement of various constructs that include: competence, shared values, commitment, communication, cooperation, reputation, satisfaction, conflict handling and performance. For example, Mayer *et al.* (1995) concluded that ability, benevolence and integrity are the three main determinants of trustworthiness. Similarly, Lee and Turban (2001) concluded that integrity, competency, ability and benevolence as trustworthiness determinants. Caldwell and Clapham (2003) established that ability and skills, competencies and expertise are the key elements of trustworthiness. In a study by Bews and Rossouw (2002), the findings revealed openness, integrity, benevolence, and competency as the key dimensions of trustworthiness. Chong *et al.* (2003) identified the dimensions of trustworthiness in an e-commerce organisation as perceived integrity, perceived competency and perceived benevolence. The study by Coulter and Coulter (2002) established that competence, ability to customise solutions, promptness, reliability, empathy, politeness and perceived similarity between service representatives and customers are pivotal to the development of trustworthiness. In a recent study, Kharouf *et al.* (2014) concluded that consistency, integrity, value alignment, competence, communication and benevolence positively influence trustworthiness of a service provider.

Findings from previous studies also reveal inconsistent findings. For example, some studies argue that reputation is not a significant antecedent to bank trust (Johnson and Grayson, 2005; Kim, Shin and Lee, 2009a), while other studies concluded that reputation is a significant antecedent for bank trust (Hoq, Sultana and Amin, 2011; Liu and Wu, 2007). Furthermore, some studies measuring the influence of communication on trust in banks concluded that it positively influences trust in banks (Ball, Coelho and Machas 2004; Kassim and Abdulla, 2006; Kharouf *et al*., 2014), yet other studies found it to be insignificant (Deb and Chavali, 2010; Mukherjee and Nath 2003). Some studies concluded that competence has significant influence in building trust (Kharouf *et al*., 2014; Ennew and Sekhon, 2007; Mayer *et al.*, 1995), but a recent study by Sandaba and Magobeya (2016) did not find a significant impact of

competence on trust. The difference in these study findings confirms the multi-dimensionality of trust and the differences in the conceptualisation of trust based on the study context.

A summary of key determinants of trustworthiness and their meaning is provided in Table 3.2 below:

Table 3 2: Determinants of Trustworthiness

Dimensions	Definition	Author
Communication	The formal and informal sharing of information timeously and effectively.	Anderson and Narus (1990), Dywer *et al.* (1987), Ennew and Sekhon (2007)
Benevolence	Accepted duty to protect the rights of the other partner, confidence in sharing information or problems with the other partner	Butler (1991), Butler and Cantrell (1984), Doney and Cannon (1997), Ennew and Sekhon (2007), Hart *et al.* (1989), Mayer *et al.* (1995), Rempel and Holmes (1981),
Loyalty (behavioural and attitudinal)	A partner is not only reliable but also performs well in extraordinary situations	Butler and Cantrell (1984), Dick and Basu (1994)
Reliability Consistency	The ability to deliver expected services/products timeously, efficiently and all the time.	Butler and Cantrell (1984), Doney and Cannon (1997), Ennew and Sekhon (2007), Morgan and Hunt (1994), Rotter (1980)
Competence	Ability to deliver the expected services/products to the satisfaction of the receiver.	Butler (1991), Butler and Cantrell (1984), Ennew and Sekhon (2007), Luhmann (1988), Mayer *et al.* (1995), McKnight *et al.* (1998)
Multiple forms of trust trustworthiness	There is more than one type of trust	Butler and Cantrell (1984), Morgan and Hunt (1994), Rempel and Holmes (1981), Sirdeshmukh *et al.* (2002)
Integrity	Set of principles and values that signals to an exchange party that the other party is honest and adheres to a set of acceptable principles.	Ennew and Sekhon (2007), Mayer *et al.* (1995), McKnight and Chervany (2001), Morgan and Hunt (1994).
Value alignment	Perceived shared values	Ennew and Sekhon (2007), Morgan and Hunt (1994), Sitkin and Roth (1993).

Source: Adapted from Handfield and Bechtel (2004).

3.1.1 The Integrated Model of Organisational Trust

Mayer *et al.* (1995) and Schoorman, Mayer and Davis (2007) developed an integrated model of organisational trust cited in numerous studies to measure interpersonal trust as depicted in Figure 3.1. The model is highly regarded as one of the first to conceptualise trust as a multidimensional concept that is relational in nature and context-specific (Ball, 2009). Mayer *et al.* (1995:712) defined trust as “the willingness of a party to be vulnerable to the actions of another party based on the expectation that the other will perform a particular action important to the trustor, irrespective of the ability to monitor or control that other party’’. Their definition

of trust is widely regarded as the most cited trust definition in organisational literature (Ball, 2009; Gillespie, 2012). The two key components of this definition are firstly, that an exchange partner has to be prepared to be vulnerable and secondly, that one has to have positive expectations of the outcome of a relationship if one is to trust an exchange partner.

Figure 3.1: The integrated model of organisational trust

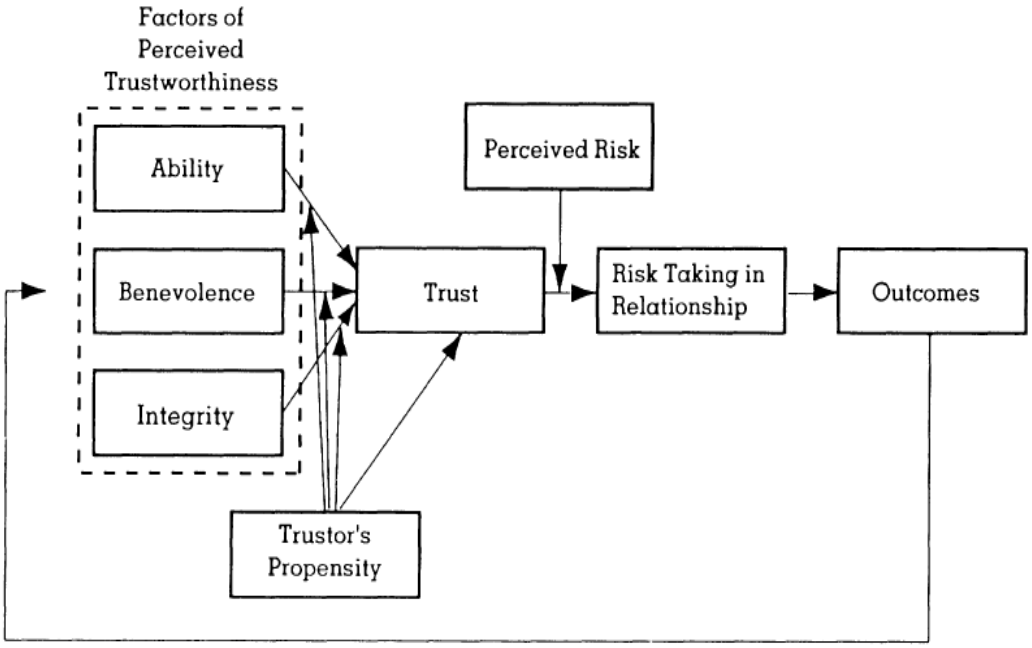

Source: Mayer *et al.* (1995) and Schoorman, Mayer and Davis (2007).

The model centres around trust signifying the intentions of the trustor and trustee to accept vulnerability towards each other, and this is shown by the actual decision to trust (Schoorman *et al.,* 2007). The model does not view trust simply as an individual characteristic that remains constant regardless of the context. Thus, the model conceptualises trust as being mostly dependent on attributes of both the trustor and the trustee within a defined relationship that varies in strength and depth over a period of time (Mayer *et al.*, 1995; Schoorman, Mayer and Davis, 2007).The significance of the model is that proper trust measurements should be able to assess the extent to which the trustor is willing to be significantly influenced by the trustee in a particular setting (Gillespie, 2003; Schoorman *et al.,* 2007).

In addition, the model demonstrates trait factors that include the trustor's propensity and perceptions of trustees' trustworthiness characteristics: benevolence, ability and integrity. (Mayer and Gavin, 2005). It is therefore important to realise that the antecedents of trust should be differentiated from trust itself (Mayer *et al.* 1995; Schoorman *et al.*, 2007). This

conceptualisation of trust and trustworthiness has since been included in subsequent models; for example, McKnight *et al.* (1998). Mayer *et al.* (1995) identified integrity, benevolence and ability as trustworthiness dimensions that influence trust.

3.1.2 The Decision to Trust Model (DTM)

Hurley (2012) developed the DTM that can be applied in different study contexts as depicted in Figure 3.2 below. Hurley (2012) contends that due to the decline in trust, people are mostly prioritising their own interests which is likely to lead to reluctance or resistance of cooperative behaviours in organisations, implying that the focus becomes that of self-protection rather than of productivity.

Figure 3.2: The components of the DTM

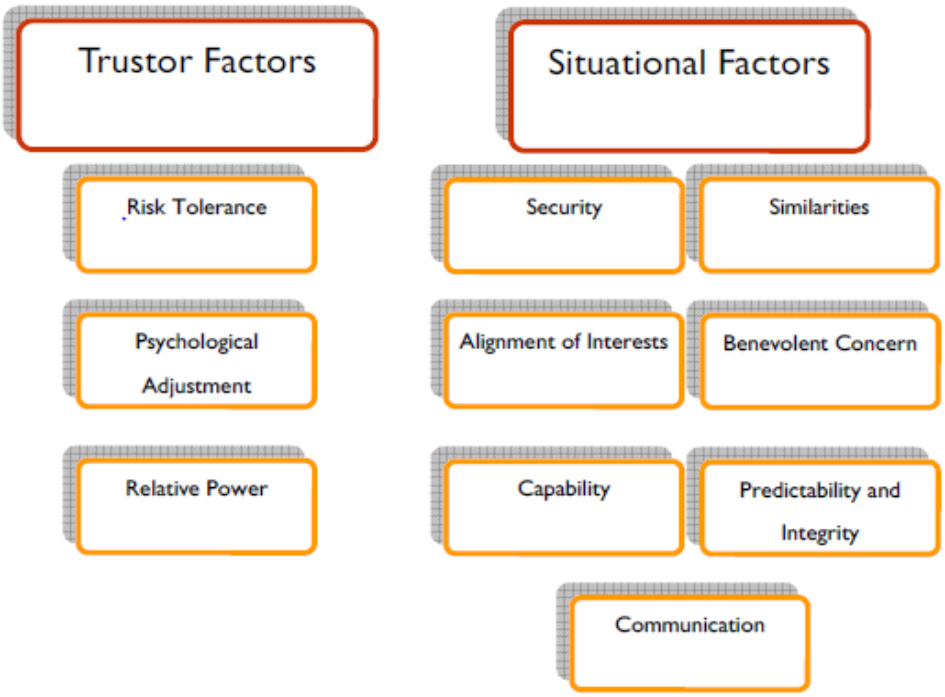

Source: Hurley (2012).

The model consists of three trustor factors (risk tolerance, psychological adjustment and relative power) and seven situational factors (security, similarities aligned interests; benevolent concern; predictability and integrity; capability and communication). Trustor factors are concerned with the trustor's personal characteristics that will determine the trustor's ability to trust, and they can be used to predict trusting behaviours (Hurley, 2012). Hurley (2012) also suggests that a person who has a low level of risk tolerance and/or is not well adjusted is likely to be less trusting. Furthermore, an individual who feels powerless is also less likely to trust.

The seven situational factors relate to a particular situation in which the relationship to the trustee and can be most effectively addressed and influenced to gain trust. Hurley (2012) further argue that people by nature instinctively rely on each other in order to satisfy their needs and it is through trust that cooperative behaviours are conspicuous without continuously having to monitor the behaviour of others.

In the DTM model, Hurley (2012:25) defines trust as "having 'confident reliance' in another party whenever an uncertain situation entails some vulnerability or risk". This definition views trust from three perspectives: interpersonal, organisational and system level. Furthermore, Hurley (2012) argues that although the common belief is that trust is mostly dependent on how trustworthy others are, the actual decision to trust is mostly dependent on the individual who decides to trust or not to trust. This is simply because, irrespective of how trustworthy someone might be, there are some individuals who will always require evidence when making a decision to trust. Thus, the DTM provides insights into relational and situational factors that will help to mitigate the reluctance to trust (Hurley, 2012).

3.1.3 The Financial Services Trust Index

Ennew and Sekhon (2007) developed The Financial Services Trust Index as depicted in Figure 3.3 below which is a framework for understanding the nature and determinants of trust and trustworthiness in financial services organisations.

Figure 3.3: The Financial Services Trust Index

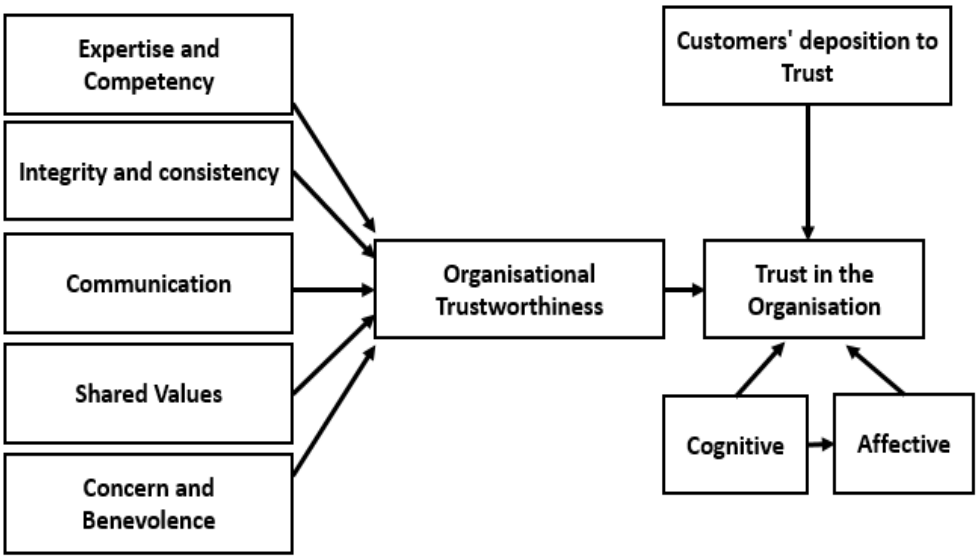

Source: Adapted from Ennew and Sekhon (2007).

Their model conceptualises organisational trustworthiness as the main determinant of consumer trust in financial services organisations. It further proposes that trustworthiness exists at two levels: high levels of trustworthiness which relates to the cognitive (transactional) aspects of trust that are mainly concerned with how customers perceive financial organisation to be reliable and to keep their promises (Ennew and Sekhon, 2007). The low levels of trustworthiness are related to the affective trust (relational) dimension and mostly concerned with how financial organisations show concern about the interests of their customers (Ennew and Sekhon, 2007).The study findings established that trustworthiness determinants (integrity, benevolence, shared values and competence/expertise) positively influences trustworthiness. The study further revealed that integrity and benevolence had the highest influence on organisational trustworthiness, while shared values and communication had the weakest influence on organisational trustworthiness (Ennew and Sekhon, 2007).

Based on the above analysis of different models (The Financial Services Trust Index, The Integrated Model of Organisational Trust and the DTM) and an analysis of other constructs employed in the measurement of trustworthiness found in marketing literature, it is clear that there is no consensus on the determinants of trustworthiness, particularly for service providers like banks. The models, nevertheless, provided valuable insights into how various factors contributing to trust, trust itself and outcomes of trust are differentiated (Mayer *et al.*, 1995). However, the current study argues that while the models reviewed above provide guidance on the determinants and measurement of trustworthiness of a service provider, an important construct, structural assurance, which is important in most banking sectors in African countries, was not considered in any of these models. Given this context, and based on findings from a study on financial services by Ennew and Sekhon (2007) who developed and operationalised a framework to measure consumer trust in the financial services sector, this study adopted five trustworthiness determinants: competence, integrity/consistency, benevolence, value alignment and communication. A sixth element relating to regulation and control mechanisms (structural assurance) that was not included in the study by Ennew and Sekhon (2007) is investigated in this study. The inclusion of this construct was motivated by the closure of several locally-owned banks in Zimbabwe during the past two decades. It is the researcher's view that the persistent closures warrant further investigation in order to ascertain the influence of structural assurance on bank trustworthiness. The study also investigates how bank trustworthiness influences behavioural intentions and affective commitment. Furthermore, the study predicts that affective commitment will lead to positive behavioural intentions. Further discussions on the rationale of adopting each study construct investigated in this study are provided in the following sections.

3.3 TRUSTWORTHINESS DETERMINANTS AND HYPOTHESES

The first research question sought to identify trustworthiness factors that can be regarded as having the strongest influence on the decision to trust the bank by its customers. This section discusses the justification for using the identified trustworthiness determinants: competence, integrity and consistency, benevolence, value alignment, communication and structural assurance in the development of hypotheses *(H1-H6)* to answer the first research question:
Research Question 1: *Which trustworthiness factors can be regarded as having the strongest influence on the decision to trust bank by its customer?*

3.3.1 Competence

The relationship between competence also referred to as skill and trustworthiness is acknowledged by many researchers including Kharouf *et al.* (2014); Ennew and Sekhon (2007); Kharouf (2010) and Mayer *et al.* (1995) who all concluded that competence has a positive influence on the trustworthiness of a service provider. Competence boosts confidence in the abilities of exchange partners and is based on the belief that the other party is capable and reliable to deliver on promises made (McAllister, 1995). Other researchers associate it with the knowledge, expertise and ability (skill) to fulfil the needs of the trustor (Xie and Peng, 2009). Xie and Peng (2009) further suggest that the perceived competence of a company assists in rebuilding trust, especially after a service provider has experienced negative publicity. Thus, perceived competence mitigates the level of perceived financial risk as customer's confidence in the service provider's abilities to perform efficiently is boosted (Kharouf *et al.,* (2014). Hurley *et al*. (2014) suggest that embedding adequate competence entails "…enhancing the speed and effectiveness of organisational learning to detect and correct emerging problems and unintended side-effects of organizational actions". From a banking perspective, bank customers must be willing to take the risks associated with doing business with a particular bank and must be willing to accept or acknowledge the bank's capability in delivering on its obligations. Thus, competence is linked to the organisation's ability to deliver on its promises (Donney and Cannon, 1997). In the context of this study, the skills of the banker are fundamental in fulfilling obligations and knowledge about the other party comes into perspective as it "thickens or thins as a function of their cumulative interaction" (Kramer 1999:575). Competence is also important in the financial industry context as it is concerned with customer perceptions of the knowledge and skills of the service provider (Coulter and Coulter, 2002), especially when one considers the risks associated with financial exchanges (Gillespie and Hurley, 2013). Therefore:

H_1: Competence has a positive influence on organisational trustworthiness

3.3.2 Integrity (Consistency)

Bews and Rossouw (2002:382) define integrity as "[...] the application of a set of moral and ethical principles, acceptable to both trustor and trustee, which are predictable and reliable and which lead to equity". Integrity can be demonstrated by how a service provider upholds a set of principles and values that the trustor finds acceptable (McKnight and Chervany, 2001). Other researchers have reported that integrity is integral in fostering overall trust since it aids exchange partners to predict future behaviours under environments of uncertainty (Doney and Cannon, 1997). Mayer *et al.* (1995) view integrity as a commitment guided by certain principles that are demonstrated through several behaviours including honesty, predictability, credibility and dependability. Xie and Peng (2009) argue that corporate integrity is vital in rebuilding trustworthiness after negative publicity has tarnished the company image. This study argues that integrity and consistency seem to mean the same thing, because if a service provider is predictable and credible, it implies that they are consistent in the delivery of services. In support of this argument, Ennew and Sekhon (2007:64) define integrity as: "The extent to which a financial services institution is honest and consistent in what it does from a customer perspective". Similarly, Mayer *et al.* (1995) argue that integrity is based on the perceived consistency between words and actions and alignment with internal beliefs.

McKnight, Cummings and Norman (1998) suggest that a trustor forms trustworthiness perceptions based on the predictability (consistency) of the trustee's behaviour. In the context of a bank, if the bank is consistent in the delivery of its obligations to its customers, it will assist in reducing uncertainty and also in mitigating the customer's perceived risk. It also enhances the trustworthiness perception in the mind of the consumer. Thus, consistency strengthens the predictability of the bank's future performance while also helping to build trustworthiness (McKnight *et al.*, 1998). Butler and Cantrell (1984) further suggest that promises made by service providers boost the consumer's confidence in their expectations of the fulfilment of the service provider's expected obligations. This implies that consistency and integrity strengthen the promise and also allows the consumers' to make predictions of the service provider's future performance, ultimately building trustworthiness. Therefore:

H_2: Integrity (consistency) has a positive influence on organisational trustworthiness

3.3.3 Benevolence

Mayer *et al.* (1995:718-719) define benevolence as "the extent to which the trustee wants to do good to the trustor". In their definition of trust, Doney and Cannon (1997:36) highlight the relationship between trust and benevolence in describing trust as "perceived credibility and benevolence of a target of trust". Benevolence is about establishing mutually fulfilling

interactions rather than maximising profits and it is more conspicuous when the trustee has the choice to behave in an opportunistic manner, but opts not to do so (Kharouf *et al.,* 2014). The avoidance of this opportunistic behaviour signifies an act of benevolence (Mayer *et al.,* 1995). Similarly, "Benevolence is based on the trustee's willingness to establish mutually fulfilling interactions rather than maximizing their own profits" (Kharouf *et al.,* 2014:364). Customers are more inclined to trust service providers who they believe care about their welfare (Hurley, 2012). Hurley *et al*. (2014) suggest that banks can demonstrate benevolence through participating in community-building activities that are in line with their business models.

In addition, "Benevolence often precedes affective trust, as the knowledge that a service provider is willing to forgo some rewards in favour of a mutual benefit strengthens existing trustworthiness and future expectations" (Kharouf *et al.*, 2014:364). Therefore, benevolence positively influences the affective aspects of the relationship by demonstrating a caring attitude towards the trustor (Mayer *et al.,* 1995). This statement is reinforced by Ganesan (1994:3) who states that "Benevolence is based on the extent to which the consumer believes that the vendor has intentions beneficial to the [consumer] when new conditions arise, conditions for which a commitment was not made". This definition is particularly relevant to the current study context in that, customers are facing challenges in accessing bank services for example, accessing their funds held by banks, challenges that they did not anticipate or plan for. Hence, there are new conditions on how they can access their funds, conditions that they did not bargain for initially. Thus, banks have the opportunity to demonstrate their caring and fairness in the way they assist customers to access their cash and mitigate other challenges bank customers are facing. Therefore:

***H_3: Benevolence has a positive influence on organisational trustworthiness*.**

3.3.4 Value Alignment (Shared Values)

Shared value is rooted in a company's strategy and one way that the relationship between businesses partners can improve is through greater identification similarities of attitudes and opinions (Hofstede, 2001). This perceived value alignment boosts confidence in an exchange partner (Gill *et al.*, 2006), which enhances trust levels in a service provider (Coulter and Coulter, 2003). Value alignment is particularly important in service industries like banks, because of the complexity of the services delivered which might also be easily accessible at times. Hence, perceived similarities have the potential to influence customers to trust the service provider (Gill *et al.,* 2006). Morgan and Hunt (1994) as well as Ennew and Sekhon (2007) all concluded that value alignment contributes to the development of trust. The current

research adopts the definition of shared values by Morgan and Hunt (1994) that regards shared values as, common beliefs in what constitute acceptable behaviours common and similarities in goals and beliefs of partners in business exchange. In the wake of the confidence crisis in the Zimbabwean banking sector, the relationship between banks and society (consumers) has grown increasingly combative, because of the continuous erosion of trust. It is therefore proposed that creating shared values, thus capturing profits while enabling individuals, institutions, and sectors to prosper, is fundamental in rebuilding trust. Therefore:

H_4: Value alignment has a positive influence on organisational trustworthiness.

3.3.5 Communication

Roy *et al.* (2011) argue that communication is an important component in establishing a long-term relationship and that trust is an antecedent of communication. Similarly, Anderson and Narus (1990) position communication as an antecedent to trust. It is also argued that communication expedites the resolution of conflicts and ambiguities while also having a significant influence on customers' future trustworthiness perceptions (Dwyer *et al.,* 1987). Hurley *et al*. (2014) suggest that, in the aftermath of a confidence crises, banks must identify new ways to engage stakeholders in an effort to enhance trust and improve relations. Furthermore, it was established that both the frequency and intensity of communication increase the level of mutual trust while simultaneously facilitating the prompt resolution of disputes and misunderstandings (Mukherjee and Nath, 2003; Smith and Barclay, 1997). This argument is particularly relevant in the context of this study in that there are many misunderstandings and ambiguities in the Zimbabwean banking industry and communication might provide the much-needed clarification about certain issues affecting the banking sector.

Customer perceptions of effective communication are said to positively impact on organisational trust, as both parties will be under the assumption that the effective communication trend will continue in the future (Morgan and Hunt, 1994). In addition, Morgan and Hunt (1994) state that open communication facilitates the development of trust and effective communication is regarded as a high-level determinant of trust. This study takes the position that communication is important throughout the relationship between a bank and its customers as it will positively influence the customer's trustworthiness perceptions. However, in the context of the present study, it should not be just about the intensity and frequency of the communication. Instead, banks should also focus on effective communication (Morgan and Hunt, 1994) as it is assumed to be more significant during a period of financial anxiety like the one prevailing in the Zimbabwean banking sector. Therefore:

H_5: Communication has a positive influence on organisational trustworthiness.

3.3.6 Structural Assurance (Regulations and Control Mechanisms)

Generally, the banking sector is regarded as inherently unstable based on negative historical developments, and hence, consumers are concerned with the bank regulations, which justifies the need for structural assurance in a financial sector (Niemeyer, 2006). Contractual agreements often include structural assurance, which includes "legal, governmental, contractual and (other) regulatory structures that create an environment that feels safe and secure to participants" (McKnight *et al.,* 2002:304). Systems-based trust develops if there are perceptions of a strong regulatory system that ensures the effectiveness and reliability of the financial system (Gillespie and Hurley, 2013). It is further argued that bank customers develop high trust levels towards their banks if there is an assurance of a sound regulatory framework (Gill et al., 2006). Regulation has been found to enhance confidence in the financial sector and that, "…customers' perceptions of an organization's level of compliance and conformity with laws and regulations is a necessity for banks'' (Nienaber *et al.,* 2014:388).

In the context of the banking industry, regulation enhances customer confidence and generate a generally positive attitude towards banks since depositors feel secure that they will not lose their money in the case of bank failures (Broaddus, 1994). However, it is important to note that consumer protection is more prevalent in developed countries as consumers have lots of options and confidence in the market mechanism instead of relying more on government regulations (Asher, 1998). This is contrary to the situation in developing countries where consumers mostly rely on the government intervention for protection (Al-Ghamdi, Sohail and Al-Khaldi, 2007). The strong banking regulations are, therefore, meant to encourage more consumers to use the banking system as they increase confidence in predicting banks' future behaviours (Sitkin and Beis, 1994). Thus, structural assurance is considered as an important factor in this study that requires further investigation in order to understand how it influences consumer trust. The inclusion of structural assurance in this study is further reinforced by a number of banks that have been forced to shut down for various reasons prompting the question: is there a sound regulatory system in place to protect the interests of banking consumers in Zimbabwe? Given this context, the study investigates how structural assurance influences bank customers' trustworthiness perceptions. Therefore:

H_6: Structural Assurance has a positive influence on organisational trustworthiness

3.4 TRUSTWORTHINESS OUTCOMES AND HYPOTHESES

3.4.1 Behavioural Intentions as an Outcome of Trustworthiness

The second research objective sought to investigate the influence of bank trustworthiness on behavioural intentions of bank customers and the following research question was formulated: **Research Question 2**: *What influence does bank trustworthiness have on behavioural Intentions of bank customers?*

In marketing research, many consumer behaviour studies use behavioural intentions as a dependent variable because of its ability to predict human behaviours which is the ultimate aim of many studies (Zolait, Mattila and Sulaiman, 2008). Thus, the concept of behavioural intention is important to service providers (Olorunniwo, Hsu and Udo, 2006). More importantly, behavioural intentions are regarded as good indicators of a consumer's intention to develop a lasting relationship with a service provider (Wilson, Zeithaml, Bitner and Gremler, 2012:426). Behavioural intentions can either be favourable or unfavourable (Ladhari, 2009; Zeithaml, Berry and Parasuraman, 1996). Behavioural intentions are regarded as favourable if they result in increased business transactions, positive word of mouth (WOM) and a willingness to pay a premium price. On the contrary, unfavourable behavioural intentions can result in brand switching, negative WOM, decreased business transactions and a general unwillingness to pay a premium price (Zeithaml et al., 1996). Similarly, Ozdemir and Hewett (2010) concluded that behavioural intention is a higher-order construct consisting of positive WOM, willingness to recommend company products and services to other potential users and intentions to repeat purchases from a particular service provider.

Han and Back (2006) also argue that favourable behavioural intentions can result in customer loyalty, repeated purchases and positive WOM, which can assist the business in determining future consumption behaviour of a consumer and those of the customer's WOM recipients. Wilson *et al*. (2012) describe WOM as the informal communications that take place between a customer and other potential customers guided by a customer's evaluation of a business's products and services. WOM is highly regarded as a powerful marketing tool that exhibits significant influence in buying decisions as most potential customers regard WOM (personal communication) as more truthful and more reliable compared to non-personal information (Podnar and Javernik, 2012:146). In this study, behavioural intentions refer to customer's intention to purchase more bank products/services, customer's intentions to remain loyal to the bank and customer's willingness to communicate positive WOM based on the customer's perceptions of the bank's trustworthiness. Therefore:

H_7: Organisational trustworthiness has a positive influence on behavioural intentions

3.4.2 Affective Commitment as an Outcome of Trustworthiness

The third research objective sought to investigate the influence of bank trustworthiness on the affective commitment of bank customers and the following research question was formulated: **Research Question 3:** *What influence does organisational trustworthiness have on affective commitment of bank customers?*

Organisations develop trust in order to encourage customers to stay committed to their brands (Doney and Cannon, 1997; Morgan and Hunt, 1994). In RM literature, relationship commitment is defined as "an enduring desire to maintain a valued relationship" (Moorman *et al.*, 1992:314). Similarly, Geyskens Steenkamp and Kumnar (1998) describe commitment as the motivation to stay with a supplier. Commitment is also defined as "a desire to develop a stable relationship, a willingness to make short-term sacrifices to maintain the relationship, a confidence in the stability of the relationship, and investments in the relationship" (Anderson and Barton, 1992:19). Morgan and Hunt (1994:23) define relationship commitment as "an exchange partner believing that an ongoing relationship with the other is so important as to warrant maximum efforts at maintaining it, that is, the committed party believes the relationship is worth working on to ensure that it endures indefinitely". Morgan and Hunt (1994) also argue that commitment entails being vulnerable such that an exchange partner will only commit to a partner that is trustworthy. The following statements summarise key elements of commitment (Du Plessis, 2010):

- Commitment is directly linked to the concept trust;
- Parties in the relationship trust each other, are loyal and the relationship is stable; and
- Parties in the relationship work to create a long-term relationship with each other.

Hennig-Thurau, Gwinner and Gremler (2004) argue that loyalty and commitment mean the same thing. However, other researchers contradict this argument by stating that while these two constructs are related, they are not the same in that commitment is an antecedent of loyalty (Morgan and Hunt, 1994). Other researchers argued that trust and commitment are two highly interrelated notions (Kumar, Hibbard and Stern, 1994). This view is also supported by Bettencourt and Brown (1997) who suggests that commitment has a strong positive effect on loyalty. In addition, commitment leads to positive intentions to maintain a long-term relationship with an organisation implying that customer loyalty is positively influenced by commitment (Čater and Čater, 2010). Trust and commitment are regarded as key elements of a business relationship as "…they stimulate a relational bond between the supplier and the

customer that facilitates the establishment of productive collaborations that reduces uncertainty in the relationship" (Gounaris, 2005:126).

Figure 3.4: Key Mediating Variables (KMV) Model of RM

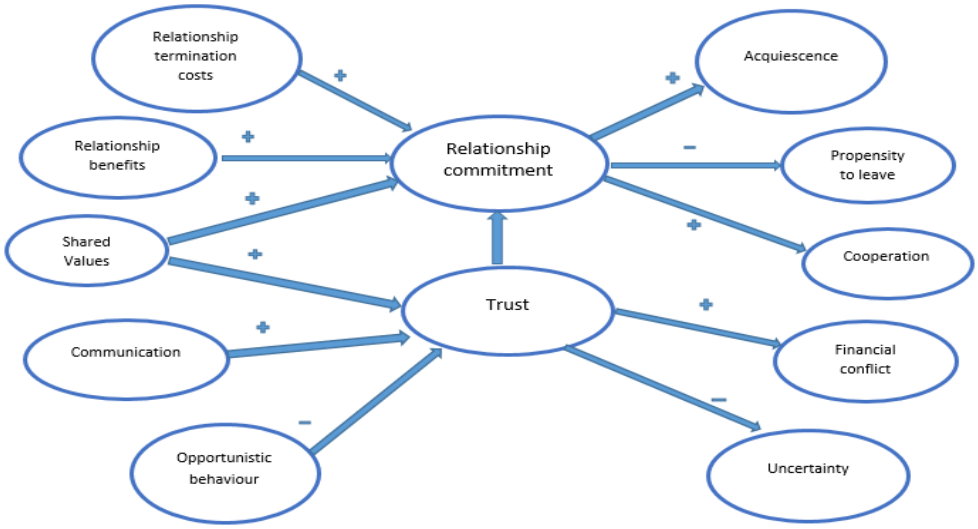

Source: Adapted from Morgan and Hunt (1994).

The commitment-trust model by Morgan and Hunt (1994) illustrated in Figure 3.4 above is an established and well-utilised model in RM. The model identifies relationship commitment and trust as key variables for successful relationships as they encourage cooperation and encourage partners to pursue long-term relationships. Morgan and Hunt (1994) argue that relationships characterised by elements of commitment and trust facilitate acceptance of high risk transactions as both parties have the belief that they are pursuing a mutually-beneficial long-term relationship. This seminal research also identifies antecedents of trust as shared values, communication and opportunistic behaviour.

Allen and Meyer (1990) identify three dimensions of commitment: affective, normative and continuance commitment and O'Reilly and Chatman (1986) suggest that affective commitment mostly results from an affirmative psychological feeling customers have towards an organisation. On the contrary, normative commitment is mostly derived from moralistic obligations and continuance commitment is derived from the need component that results from side bets (Meyer and Parfyonova, 2010; Powell and Meyer 2004). Meyer and Allen (1984:375) define affective commitment as "positive feelings of identification with, attachment to and involvement in the work organisation", they also defined continuance commitment as "the extent which employees feel committed to their organisation by virtue of the costs that they

feel are associated with leaving". Further, Allen and Meyer (1990:6) define normative commitment as "the employee's feelings of obligation to remain with the organisation".

Colquitt, Scott and LePine (2007) concluded that trust is a significant determinant of commitment and that commitment is influenced by trust. Bagraim and Hime (2007) established a significant relationship between trust and affective commitment scales. Additionally, studies by Bussing (2002) and Schindler and Thomas (1993) found support for a strong relationship between commitment and trust. Similarly, Gutierrez, Cillan, and Izquierdo (2004) determined that trust is a significant antecedent of affective commitment.

This study focuses on the affective commitment dimension as it is considered to have a positive influence on permanent behaviours (Jin, Lee and Cheung, 2010; Wang and Datta 2006). Affective commitment is also considered as an important factor in the establishment and maintenance of enduring relationships (Sharma, Young and Wilkinson 2006). Fullerton (2003) further suggests that affective commitment is crucial in customer retention as it acts as an exit barrier for customers who are tempted to move to another service provider. Meyer and Allen (1991) describe affective commitment as the psychological attachment that individuals have with a service provider as well as their sense of identification with the organisation. Effectively, affective commitment is the strong psychological connections customers have with an organisation which validates their reasons for wanting to stay loyal to the organisation (Snyder and Cistulli 2011). Similarly, Čater and Žabkar (2009) suggest that when customers are committed, they have a sense of loyalty and belonging.

De Ruyter, Moorman and Lemmink (2001) concluded that trust impacts positively on affective commitment in supplier-customer relationships in high-technology markets like the banking industry. The implication for the current study is that affective commitment of bank customers can be regarded as being positively related to their loyalty to the bank. Thus, the study takes the position of Gruen, John and Frank (2000) who suggest that affective commitment is connected to permanent attachments a bank customer has with the bank that results in the sense of belonging or a psychological connection to the bank. Therefore:

H_8: Organisational trustworthiness has a positive influence on affective commitment.

3.4.3 Affective Commitment as an Outcome of Behavioural Intentions

The study also sought to establish the influence of affective commitment on behavioural intentions as predicted in the study's conceptual model. Therefore, the following research question and follow up hypothesis were formulated:

Research Question 4: *What influence does affective commitment have on behavioural intentions of bank customers?*

H_9: *Affective commitment has a positive influence on behavioural intentions*

The critical variables of the study conceptual framework and the hypotheses developed for the study as discussed above have been summarised and illustrated in the conceptual framework as detailed in Figure 3.5 below:

Figure 3.5: Study conceptual model.

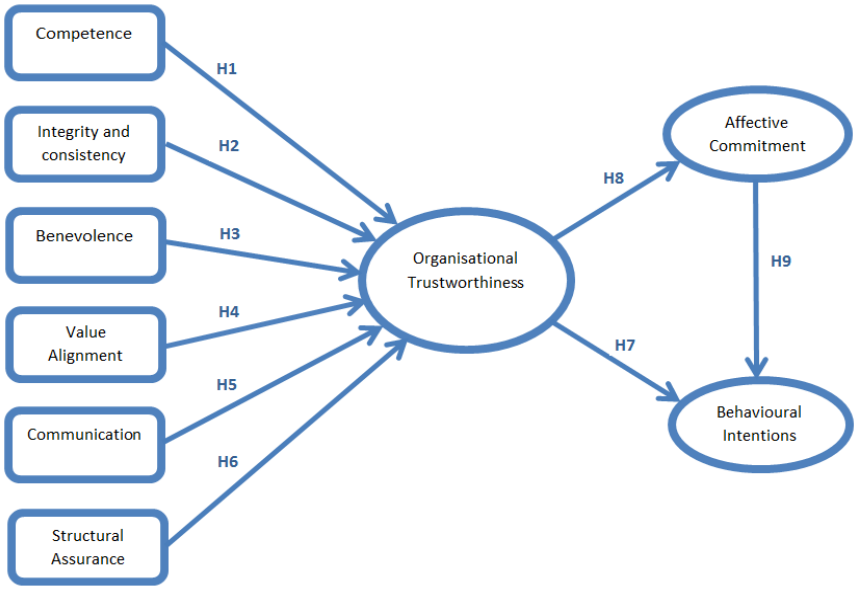

Source: Developed for this study.

3.5 CHAPTER SUMMARY

This chapter examined and rationalised the various constructs in the proposed conceptual framework as well as validating the development of the hypotheses. Based on the analysis of previous models developed to measure trust and trustworthiness prevalent in literature, the researcher concluded that competence, integrity and consistence, benevolence, value alignment, communication and structural assurance are the drivers of trustworthiness most relevant to the study context. The next chapter highlights the various aspects of the proposed methodology that facilitated the empirical testing of the proposed hypotheses.

CHAPTER 4: RESEARCH DESIGN AND METHODOLOGY

4.1 INTRODUCTION

This chapter discusses the research methodology used to address the research questions and to test the research hypotheses. “Methodology is a systematic approach or framework that is concerned with the research process from the theoretical foundation to the collection and analysis of data” (Collis and Hussey, 2009:73). Therefore, this chapter discusses:

- the adopted research philosophy and the rationale of the chosen philosophy;
- the research strategy, the research method, the research design adopted and the rationale of the choices made;
- the research instruments used to collect data and the rationale of the chosen instruments;
- the data analysis approach; and
- the ethical considerations.

4.2 RESEARCH PHILOSOPHY

Saunders, Lewis and Thornhill (2016:124) define research philosophy as a:

> System of beliefs and assumptions about the development of knowledge. These include assumptions about human knowledge (epistemological assumptions) about the realities you encounter in your research (ontological assumptions) and the extent and ways your own values influence your research process (axiological assumptions).

They further state that “These assumptions inevitably shape how you understand your research questions, the methods you use and how you interpret your findings” (Saunders *et al*., 2016:124).

Saunders *et al*. (2016) also identified four main research philosophies as positivism, realism, interpretivism and pragmatism that are based on five dimensions, namely general description, ontology, epistemology, axiology, and data collection techniques as depicted in Table 4.1 below.

Table 4.1: Research philosophies

	POSITIVISM	REALISM	INTERPRETIVISM	PRAGMATISM
General description	It is the form of epistemology. The notion is that scientific methods must be applied to the study of social reality and beyond.	It is a form of epistemology similar to positivism. It also posits that, to create knowledge, scientific approaches or methods should be used. The existence of objects takes place independent of the knowledge of their existence – there is a reality that is separate from our description of it. Thus, there is a reality which exists on its own, not dependent on the mind. This makes it directly opposed to idealism. Idealism explains that the mind and its contents are the only things that exist. This implies that truth is defined by what human senses show us.	It is a form of epistemology. It usually denotes a contrasting epistemology to positivism (anti-positivism). Its key assumption is that the researcher needs to understand how humans differ as they play their role as social actors.	It is a form of epistemology. It poses the argument that the research question is the fundamental determinant of the choice of research philosophy. Thus, it is possible to work within both positivism and interpretivism, depending on the nature of the research question.
Ontology: Objectivism versus subjectivism	Reality or nature of being is external, objective and does not depend on social factors. The researcher does not interfere with the subjects of the research nor is he/she affected by those subjects. The researcher and the resources of the research cannot change the facts about the phenomena being observed.	There is objectivity. It argues that reality or the nature of being exists independent of the knowledge of their existence (realist). Reality is interpreted through social conditioning (critical realist).	It is socially constructed and subjective, it may change, and it is multi-facetted. Two major anti-positivism traditions are phenomenology and symbolic interactionism. Phenomenology is concerned with how individuals make sense of the world around them and how in particular the philosopher should bracket out preconceptions in his or her grasp of the world. In symbolic interaction, humans continuously interpret the world around them. As they do so, they interpret the actions of others. These actions of others help individuals to adjust their own meanings and actions.	Reality is external and multiple. The view taken should provide the best answer to a research question.

	POSITIVISM	REALISM	INTERPRETIVISM	PRAGMATISM
Epistemology	Only phenomena that the researcher can observe will lead to the production of credible data. It focuses on causality and generalisations (that are described as law-like). It simplifies phenomena.	When phenomena are observable, credible data and facts are provided. When data are not adequate, it leads to inaccuracies in sensation (direct realism). Direct/empirical or naïve realism is believed to be consistent with the definition of realism. Alternatively, critical realism may result. This involves the creation of sensations that can be misinterpreted. Very often humans are deceived by their senses. Critical realists thus argue that humans do not experience things directly, but mere sensations and images of the things in the real world.	It is subjective, i.e. meanings and social phenomena are subjective. The focus is on the detail of the situation, i.e. a description of the reality behind the details. Actions are directed by subjective meanings.	It depends on the research, i.e. both observable (objective) and subjective phenomena can provide knowledge that is accepted depending on the research question. Applied research is the major focus. Different perspectives are combined in order to interpret data meaningfully.
Axiology	Values are not allowed to interfere with data interpretation. Thus, the researcher is objective. The researcher is independent of data.	There is some form of bias in the interpretation of data. Hence, research is a value-laden. The bias is influenced by world views and cultural forces.	It is highly subjective, because it is value-bound. It is difficult to separate the researcher from the research. Everyday social roles are interpreted based on meanings given to these roles. Interpretation of others' social roles is done based on our own set of meanings.	It is both objective and subjective, because values also influence the interpretation of data.
Data collection methods most often used	They are structured, quantitative, but can be qualitative. Large samples are typical. Research strategy makes use of existing theory to develop hypotheses that are tested, leading to further theory which may be tested by further research.	Methods chosen must be suitable for the subject matter under consideration. It can be quantitative or qualitative.	Small samples, in-depth investigations and qualitative methods are typical.	It proposes the best possible approach depending on what is being researched. The approach is practical and thus may combine different methods (quantitative and qualitative).

Source: Adapted from Bryman (2008); Saunders *et al.* (2016) and Makanyeza (2014:145).

Saunders *et al*. (2016) describe interpretivism as a research philosophy which advocates for a researcher to appreciate the different roles human play as social actors. The authors also stated that, ontology deals with the study of the nature of reality and is mostly concerned with assumptions people make with regards to their views on how the world works. It also comprises of two aspects, mainly subjectivism and objectivism. Objectivism takes the position that social entities are in existence in reality independent of social actors concerned with their existence. Subjectivism takes the position that social phenomena are a result of perceptions and the resultant actions of those social actors concerned with their existence (Bryman, 2008; Saunders *et al.,* 2016). Subjectivism is often associated with the term constructionism which implies that reality is socially constructed; thus, the subjectivist view is that through their interactions with customers, service providers produce customer service which is continuously being revised because of this interaction (Bryman, 2008). Epistemology is a branch of philosophy concerned with what knowledge is acceptable in a study discipline and axiology is a branch of philosophy concerned with roles that our values play when faced with research choices (Saunders *et al.,* 2016).

Among the four research philosophies identified in the literature as detailed in Table 4.1 above, pragmatism has been adopted for the present study, because pragmatism is regarded as practical and has a balanced view compared to the other research philosophies (Saunders *et al*., 2016). According to Creswell (2014), unlike post-positivism, the pragmatic worldview or philosophy arises out of actions, situations, and consequences rather than antecedent conditions. Further, in pragmatism ‘’the most important determinants of your research design and strategy would be your research problem that you would try to address and your research question’’ (Saunders *et al.,* 2016:143). Thus, it is not committed to any one system of philosophy and reality instead, the pragmatic researcher subscribes to the use of different but complimentary strategies to address research questions. Tashakkori and Teddlie (2009:8) eloquently define methodological pragmatism as:

> […] a deconstructive paradigm that debunks concepts such as “truth” and “reality” and focuses instead on “what works” as the truth regarding the research questions under investigation. Pragmatism rejects the either/or choices associated with the paradigm wars, advocates for the use of mixed methods in research, and acknowledges that the values of the researcher play a large role in interpretation of results.

Saunders *et al.* (2016) state that pragmatists acknowledge that there are a variety of ways in which researchers can interpret the world and that no single view can holistically map the entire picture as there might be several realities. Similarly, Creswell (2014) argues that the pragmatic approach to mixed-method research does not align itself with a single system or

philosophy. Thus, "for a mixed-methods researcher, pragmatism opens the door to multiple methods, different world views, and different assumptions, as well as different forms of data collection and analysis" (Creswell 2014:11).

The current study argues that the logic behind adopting the pragmatic view is that the research can make use of the deductive approach (using hypotheses and theory testing), inductive approach (exploring a phenomenon, identifying themes and patterns) and abduction (uncovering and relying on the best of a set of explanations for understanding one's results) (Saunders *et al.,* 2016). Therefore, this study takes the pragmatist position, because pragmatism allows for the use of mixed methods. Thus, a combination of quantitative and qualitative methods of data collection is adopted in this study (Saunders *et al*., 2016). In doing so, the research integrated different perspectives so as to improve data interpretation resulting in innovative and dynamic research that is flexible, adaptable and relevant (Bryman and Bell, 2015).

4.3 RESEARCH DESIGN

There are a number of research designs prevalent in the research methodology literature. However, the major research designs commonly applied are experimental, cross-sectional (survey), longitudinal, case study and comparative research designs. This study adopted the cross-sectional survey design which is defined by Bryman and Bell, (2015: 32) as:

> A cross-sectional design entails the collection of data on more than one case (usually quite a lot more than one) and a single point in time in order to collect a body of quantitative or quantifiable data in connection with two or more variables (usually many more than two) which are then examined to detect patterns and association.

This study adopted the cross-sectional survey design, mainly because the research design allows for the use of a large sample as well as allowing the researcher to investigate two or more cases effectively providing variation for the researcher in respect of individuals or organisations (Bryman and Bell, 2015). According to Pentz (2011), a cross-sectional survey design allows the use of structured questions and a variety of questions. This study makes use of a variety of structured questions as shown in the study questionnaire (Appendix B). Further, a cross-sectional design provides a snapshot of the variables included in the study, at one particular point in time (Bryman and Bell, 2015). Thus, it resembles a picture that tells the story as it takes place at a specific time. In the present study, the respondents were asked to respond to the questions at a point in time when trust levels were low in the banking industry. Furthermore, the cross-sectional design is cost-effective and time-bound; this was

advantageous to this study taking into consideration the limited budget for the study and the time that was needed to collect data in two phases as the study makes use of the mixed-methods approach. Thus, a cross-sectional survey design effectively made it possible to complete this research project within the prescribed time and within budget.

4.4 RESEARCH APPROACH

Research methodology literature identifies three types of research approaches as quantitative, qualitative and mixed-methods (Bryman and Bell, 2015; Creswell, 2014; Saunders *et al.*, 2016). The current study adopted a mixed-methods approach (sequential explanatory design), mainly determined by the nature of the research problem. The mixed-methods approach was considered to be more efficient in addressing the research questions as opposed to using the qualitative and quantitative approaches in isolation (Johl, Bruce and Binks, 2012). Taking into consideration that the mixed-methods design is a combination of both quantitative and qualitative research methods (Creswell, 2014), it is important that these two research methods are discussed first before elaborating more on the rationale of adopting the mixed-methods approach.

4.4.1 Quantitative Approach vs Qualitative Approach

Creswell (2014:4) define the quantitative research approach as: “An approach for testing objective theories by examining the relationship among variables. These variables, in turn, can be measured, typically on instruments, so that numbered data can be analysed using statistical procedures”. Hesse-Biber and Leavy (2004:1) argue that quantitative research is often privileged as “hard” science, as the quantitative research is more reliant on numbers and figures often presented graphically to enhance meaning and clarity. Similarly, Creswell (2014) suggest that quantitative research measures a phenomenon through the use of figures and numbers that can be analysed using statistical methods. Thus, through the adoption of a quantitative research method, a researcher focusses more on quantification when collecting and analysing data. The researcher is likely to use specific large samples of data, and the results from the representative sample will be generalised to the study population (Saunders *et al*., 2016). However, there are other authors who are critical of the quantitative research method. They argue that “Quantitative researchers fail to distinguish people and social institutions from the world of nature and that the reliance on instruments and procedures hinders the connection between research and everyday life” (Bryman and Bell, 2015:116). This implies that it is not ideal for investigating human behaviour as theories from quantitative studies lack in the provision of a well-rounded view of individuals.

The qualitative research approach is defined by Creswell (2014: 4) as:

> An approach for exploring and understanding the meaning individuals or groups ascribe to a social or human problem. The process of research involves emerging questions and procedures, data typically collected in the participant's setting, data analysis inductively building from particulars to general themes, and the researcher making interpretations of the meaning of the data.

Qualitative research mainly employs verbal (non-numerical) data, for instance, observations and interviews (Creswell, 2014). Thus, while quantitative research emphasises the testing of theory, qualitative research focuses more on generating theories through the employment of an inductive approach. The qualitative approach focuses on how individuals interpret their social world (Bryman and Bell, 2015). Further, unlike quantitative research, qualitative research is based more on the fundamental idea that is possible to gather knowledge about an individual's world through descriptive language that is "words" information about feelings, values and attitudes (Babbie, 2010:35). This implies that researchers are able to observe and examine phenomena by being converted into words (Creswell, 2014). Another differentiating factor is in the type of strategies used in research, for example, quantitative studies may use experiments while qualitative studies use case studies (Creswell, 2014).

However, just like the quantitative approach, the qualitative approach has also its own share of criticism, which has led some researchers to underestimate the contribution of qualitative studies as they are concerned with the validity and reliability of qualitative studies. For example, Creswell (2014) argue that the qualitative approach has a tendency of being stronger in using long, descriptive narratives and weak in statistically categorising events or activities and this may present challenges in the reliability of a study. Qualitative studies have also been criticised for expressing personal opinions instead of being led by the perceptions of the study respondents as is the case in most quantitative studies (Silverman, 2001). Furthermore, it is also argued that researchers are selective in how they report qualitative findings and they fail to provide an alternative perspective on how the credibility of study findings can be enhanced (Silverman, 2001).

In view of these often-conflicting arguments on the use of either the qualitative or quantitative approach, there is a third research method (mixed methods) which can arguably compensate for the deficiencies in either of these two methods as outlined in the following section.

4.4.2 Rationale for Adopting the Mixed-Methods Approach

The mixed-methods approach has gained recognition as an accepted approach to conducting business research in social sciences (Bryman and Bell, 2015). While it has been mostly used as a methodology in fields like health science, education and sociology (Bryman, 2006), other fields that were largely dominated by positivism like management, accounting, marketing and finance are also starting to show more interest in the use of the mixed-methods approach (Cassell, Buehring, Symon, Johnson and Bishop, 2006; Modell, 2010).

Creswell (2014:4) defines the mixed-method approach as “an approach to inquiry involving collecting both quantitative and qualitative data, integrating the two forms of data and using distinct designs that may involve philosophical assumptions and theoretical frame works”. The mixed research method is considered to be the most effective as opposed to using the quantitative or qualitative approached in isolation (Johl *et al.,* 2012; Creswell, 2014). Johnson *et al.* (2007) elaborate on the advantages of the method by stating that, mixed methods is a combination of qualitative and quantitative research approaches which facilitates breadth and depth of understanding and corroboration.

Using the mixed-method approach implies that the researcher goes beyond simply collecting and analysing qualitative and quantitative data: it involves using both methods in tandem as a way of ensuring that the overall strength of the study is greater than simply using either of the research methods in isolation (Creswell, 2014). The mixed-methods research approach also allows for the “opportunity to compensate for inherent method weaknesses, capitalize on inherent method strengths, and offset inevitable method biases” (Greene, 2007:13). Similarly, the use of the mixed-method approach can help to neutralise bias that may exist in any of the single methods (Creswell, 2014). In addition, the mixed-methods approach allows for interdisciplinary collaboration and the use of multiple paradigms (Creswell and Plano, 2011). The current study argues that adopting a mixed-methods approach involves the use of multiple sources of data that are collected using different methods in ways that reflect complementary strengths and non-overlapping weaknesses, implying that a mixed-methods study provides insights not possible when only qualitative or quantitative data is collected (Johnson and Turner, 2003).

However, despite the advantages highlighted above, there are documented weaknesses and disadvantages of the mixed-methods design that are prevalent in literature (Creswell, 2014; Creswell, Goodchild and Turner, 1996). For instance, despite the increasing popularity of mixed methods research, there are still conflicting views that require more clarification such as problems regarding paradigm mixing, how to best interpret quantitative and qualitative

results should they be conflicting and how to evaluate the mixed-methods study (Creswell and Plano, 2011; Johnson and Onwuegbuzie, 2004). Methodological purists also criticise the mixed methods approach for lack of philosophical foundation, and argue that it is more advisable for a study to fall in either a qualitative or a quantitative paradigm (Johnson and Onwuegbuzie, 2004). The same authors further argue that it is more challenging to conduct mixed-methods research than using a qualitative or quantitative approach as it is more costly and time consuming to collect and analyse both sets of data. Thus, the use of both methods requires doubling the work load and it also requires the researcher not only to understand each method properly, but also to be able to combine and integrate results from both methods (Bryman, 2015).

However, the use of mixed methods is still likely to be helpful in overcoming the weaknesses of singular methods (Creswell, 2014), resulting in a more complete, informative, useful and balanced study (Johnson *et al.,* 2007). Thus, a combination of both research methods is regarded as advantageous in fully addressing the research questions in a study (Creswell, 2014). In this study, the quantitative data that was collected through a survey questionnaire to measure the relationship between variables and to test hypotheses was accomplished through statistical (quantitative) analysis. There was also a need to understand the reasons why bank customers consider certain trustworthiness factors as being significant or non-significant in their decisions to trust a bank; this was done through qualitative data by conducting semi-structured interviews. Schiffman and Kanuk (2004:27) also argue in favour of the use of mixed methods by stating that, “quantitative and qualitative approaches are complementary in nature, quantitative research makes prediction possible while qualitative research provides a better understanding of the phenomena”.

In this study, the use of the mixed research method also enabled the researcher to enhance the reliability and validity of findings (Johl *et al.,* 2012). It has also been stated that findings from one method can facilitate the development or inform the other method (Greene, 2007). The results from the quantitative phase of the current study informed the interview guide for the qualitative phase. Effectively, findings from the use of the mixed methods can better assist marketers in the context of this study, namely bank marketers to design and implement more informed and meaningful marketing strategies (Schiffman and Kanuk, 2004). Nau (1995:47) states that “…qualitative and quantitative methods used in conjunction may provide complementary data sets which together give a more complete picture than can be obtained using either method singly.” Consequently, the researcher argues that the mixed-method research provides more advantages than disadvantages based on the discussion above. Therefore, the mixed-method was chosen as the preferred method for this study.

4.4.3 Sequential Explanatory Mixed-Methods Research Design

As already discussed above, this study adopted a sequential explanatory design (quantitative dominant), a form of a mixed-methods research design which is discussed in this section.

There are four major designs of the mixed-method research designs as outlined below:

- Embedded designs - In embedded designs, researchers mix the different data sets at the design level, with one type of data being embedded within a methodology framed by the other data type (Greene, 2007). This design can give priority to either the quantitative or qualitative approach but draws on the other approach as well within the context of the study (Bryman and Bell, 2015).

- Concurrent designs – In concurrent designs, the two sets of data from both the qualitative and quantitative study are collected simultaneously, the data sets will be analysed separately and both data sets are merged at the end (Creswell, 2014).

- Exploratory designs – In exploratory designs, the qualitative data is collected and analysed firstly, the results of the qualitative data will then be used to inform the quantitative process (Bryman and Bell, 2015). These designs are usually qualitatively dominated in which "one relies on a qualitative, constructivist-poststructuralist critical view of the research process, while concurrently recognising that the addition of quantitative data and approaches are likely to benefit most research projects'' (Johnson *et al*., 2007:124).

- Explanatory designs – In explanatory designs, quantitative data is collected and analysed first. The results of the quantitative analysis will then inform the qualitative phase of a study which seeks to provide a better understanding of the quantitative results (Bryman and Bell, 2015). These designs are usually quantitatively dominated in which ''one relies on a quantitative, post positivist view of the research process, while concurrently recognising that the addition of qualitative data and approaches are likely to benefit most research projects" (Johnson *et al*., 2007:124).

The sequential explanatory design entails "collection and analysis of quantitative data followed by the collection and analysis of qualitative data in order to elaborate or explain the quantitative findings" (Bryman and Bell, 2015:439). Explanatory designs are mostly adopted if the researcher finds the need to use the qualitative analysis to help explain or build on initial quantitative data. The qualitative analysis will be used to refine and explain statistical results

by exploring participants' views in more depth (Bryman and Bell, 2015; Creswell, 2014). It is the researcher's view, based on the research problem outlined in Chapter 1, that there was a need for a follow-up qualitative study (structured interviews) to better understand and explain the quantitative results (survey). Below is a diagrammatic illustration of the sequential explanatory design adopted for this study.

Figure 4.1: Mixed methods sequential explanatory design

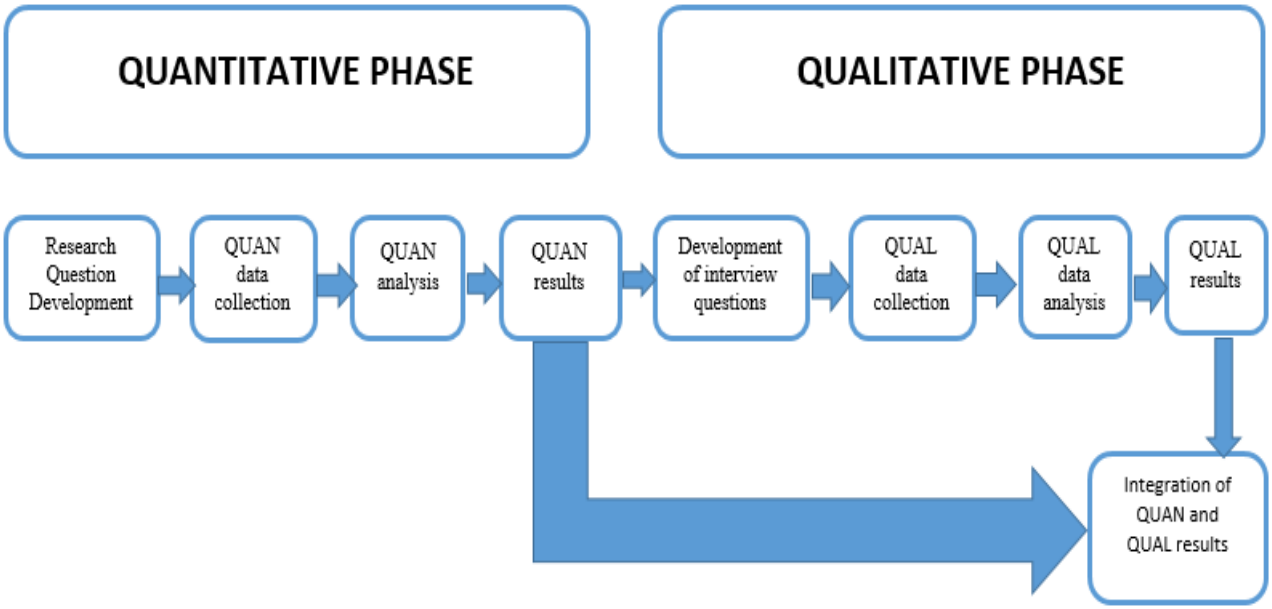

Source: Adapted from Hayes, Douglas and Bonner (2015).

As depicted in the sequential explanatory design above and based on guidelines by Hayes *et al.*, (2015), the study followed the following process:

- Quantitative research questions and hypotheses were developed to address the research problem;
- Quantitative data was collected (survey) and analysed;
- Findings from the first phase (quantitative) were explored further in a second qualitative phase to develop interview questions;
- Qualitative data was collected (semi-structured interviews) and analysed; and
- Qualitative results were integrated with the quantitative results.

4.5 POPULATION OF THE STUDY

Saunders *et al.* (2016) describe a study population as being made up of an entire group to which a researcher wishes to generalise the results of the study. Similarly, Bryman and Bell

(2015:123) define a population as “The universe of units from which the sample is selected”. Thus, a study population is an entire group made up of individuals/objects or cases from which a researcher wishes to generalise his/her findings. In this study, all bank customers from all the registered banks in Zimbabwe that were aged 18 years and above were regarded as the entire study population. According to the FBC Securities (2013), it is estimated that there are approximately 1.9 million bank account holders in Zimbabwe. The researcher did not include the whole population in the study because the entire population is very large, thus it would have been time-consuming and very expensive to collect large volumes of data from the entire population. Thus, the population of this study is limited to bank customers selected from four retail banks in Harare, Zimbabwe. Furthermore, the researcher only included participants in Harare, the capital city, because of time and financial constraints. The same population was used for both the quantitative phase and qualitative phase of this study.

4.6 SAMPLING STRATEGY

Sampling is defined as the process of selecting a segment of the population to be investigated. Bryman and Bell, (2015:123), as well as Leedy and Omrod (2015) argue that the rationale of sampling is to identify a smaller group from a population that resembles the larger population. Leedy and Omrod (2015) further state that the small group should resemble the big group as the degree of resemblance is regarded as very crucial. Ngulube (2005:132) also states that “by studying the sample it is possible to draw valid conclusions about the larger group”. Bryman and Bell (2015) identify two types of sampling methods as probability and non-probability sampling. In probability sampling, every unit in the population has a chance of being selected in the sample using random selection, contrary to non-probability sampling which involves the selection of elements based on assumptions regarding the population of interest implying that “some units in the population are more likely to be selected than others” (Bryman and Bell, 2015:123).

Initially, the researcher approached banks under study requesting access to their customer contact details in order to consider the most appropriate sampling method. However, the banks were reluctant to divulge these details for confidentiality reasons and instead, some banks offered to administer the questionnaire on behalf of the researcher which the researcher felt would compromise data integrity. Thus, the researcher opted to administer the questionnaire with the help from two assistants directly to bank customers that were queuing to access financial services. Therefore, in the absence of a database of bank customers, non-probability sampling methods were only considered for both phases of this study. Convenience sampling was adopted for the quantitative phase of the research, while

purposive sampling was adopted for the qualitative phase of the research. The entire population in this study was defined as all bank customers from all registered banks in Zimbabwe. However, only customers from four banks in Harare, Zimbabwe were selected as a sampling frame. The researcher was guided by Salkind (2018) in the determination of sample sizes who suggested that:

- While a big sample is regarded as good, the researcher has to choose an appropriate size as it is more cost-effective in terms of money and time;
- Generally, a large sample translates to a smaller sampling error and has a higher representation of the sample; and
- The sample must be large enough so that it reflects salient characteristics of the target population, assuming of course, that the population validity does exist (Mungenda and Mungenda, 2003).

4.6.1 Quantitative Sampling

As already mentioned above, for the quantitative phase of the study, convenience sampling was chosen as the most appropriate sampling method to recruit respondents that were representative of the study population. Wanninayake and Chovancová (2012) suggested that convenience sampling can be used where there is no population list as was the case in this study. In addition, convenience sampling was also used in similar studies, for example, Roy, Eshghi and Shekhar (2011) whose study was contextualised in the banking sector. Prior to administration of the questionnaire, banking activities within Harare's central business district were observed to identify the biggest and busiest branches. This was done by way of observing the branches that were busiest at month ends, when most bank customers queue to access their salaries at banks. The identified branches were then targeted during a two month period in which the questionnaire was administered. Bank customers were approached without any prior knowledge or expectations about their behaviours or attitudes and every second customer walking into a bank branch was approached to participate in the study. The rationale for approaching every second bank customer was influenced by the need to minimise potential human bias in the selection of bank customers to be included in the sample.

Field (2005:633) recommends that a minimum sample size of 200 is required to permit statistical analysis such as factor extraction, while Hair, Black, Babin, Anderson and Tatham (2006) recommend a sample of 300 to 500 in order to be sufficient for data analysis. Kline (2011) suggests that for SEM, a data analysis method used in this study, a sample size of 200 respondents is regarded as a good sample size. However, most social research adopt levels

of confidence of 95% and according to De Vaus, (2001), if the researcher is willing to accept a sampling error of 5%, a sample of 400 participants is regarded as adequate.

According to Leedy and Ormrod (2015:184), the best sample size rule is "the larger the sample the better. But such a generalised rule isn't very helpful to a researcher who must make a practical decision about a specific research situation". Furthermore, Gay, Mills and Airasian (2012:139) provide the following guidelines when selecting a sample:

- For a smaller population N= 100 or fewer, there is little point in sampling, survey the entire population;
- For a population size around 500 (give or take 100), 50% should be sampled;
- For a population size around 1,500, 20% should be sampled; and
- Beyond a certain point (about N=5,000), the population sample becomes irrelevant and a sample size of 400 can be deemed adequate.

Thus, in this study, the researcher considered a sample size of 400 based on the study population exceeding 5,000. The researcher approached respondents until the sample reached the target of 400 questionnaires. Therefore, 400 survey questionnaires were disseminated among bank customers in Zimbabwe to fulfil the statistical specifications and meet the required target. In order to get meaningful and representative results, the study used customers from four different banks in the study sample. Further, because of the unavailability of the actual number of customers in each bank (this information and it is not publicly available), the researcher thought it prudent to administer the questionnaire to 100 bank customers in each of the four banks under study to allow for a fair representation. The choice of the four banks under study was mainly influenced by bank size, ownership of the bank (foreign owned/locally owned) and number of years in business. Therefore, the researcher chose four banks to participate in the study which were deemed to have a fair representation of the banking sector in Zimbabwe and were willing to participate in the study.

The process of data collection lasted for two months. However, it was practically challenging to achieve the desired sample, mostly because of the current challenges in the banking sector under study that resulted in frustrated bank customers who at times were not eager to participate in the survey. Moreover, as alluded to earlier, for customer confidentiality reasons, banks were not willing to provide customer contact details which would have facilitated the use of e-mails in administering the questionnaire, prompting a higher probability of having access to more participants resulting in a higher response rate. In all, 281 survey

questionnaires were received from the respondents, thus a response rate of 70% was achieved. After screening for outliers and missing data, 267 questionnaire were used in the statistical analysis.

4.6.2 Qualitative Sampling

For the qualitative phase of this study, purposive sampling was adopted for the collection of qualitative data (interviews). Purposive sampling is a non-probability form of sampling in which the researcher is not seeking to pick participants on a random basis. Instead, participants are strategically chosen so that the sampled participants are relevant to the research questions (Bryman and Bell, 2015). In the qualitative phase, the researcher was not seeking to randomly select participants for the interviews, but wanted to strategically sample the interview participants so that those sampled could answer the research questions. Kumar (2005:179) states that purposive sampling is based on “the judgement of the researcher as to who can provide the best information to achieve the objectives of the study”. Similarly, Leedy and Omrod (2015) argue that the purposive sampling is mostly dependent on the researcher’s judgement of who should be included in the sample.

Tashakkori and Teddlie (2009) suggest a sample ranging from 6 – 24 for case studies, Onwuegbuzie and Collins (2007) suggest 12 participants for interviewing. The researcher used a sample of 16 participants. Other than considering the recommended samples above, the choice of a sample of 16 participants was also based on the study being more quantitatively-oriented and the purpose of semi-structured interviews was to simply explain or clarify the quantitative results and, hence the sample size was deemed adequate. Further, the use of purposive sampling ensured that the researcher identified the best participants to answer the questions the researcher wanted answered. The researcher used four groups of bank customers in order to get meaningful and representative results. Thus, four participants were chosen from each of the four banks under study, the participants included one corporate customer and three individual customers from each bank. The rationale for choosing one corporate customer and three individual customers from each bank was based on the general knowledge that the majority of bank customers are individual bank account holders and the demographic analysis from the quantitative phase indicated that the majority of the survey respondents were individual bank customers and a few corporate customers. Thus, the researcher wanted to maintain an equally representative sample in the qualitative phase.

4.7 DATA COLLECTION METHODS

Approaches to data collection include the collection of primary and secondary. Primary data are data that a researcher collects and analyse for a specific study (Saunders *et al.,* 2016) and with reference to this study, this is the data that were collected through the survey questionnaire and the structured interviews. On the other hand, secondary data are data that are already available and were collected by someone else for some other purpose or study (Tasic and Feruh, 2012). Secondary sources include books, journals, internet articles and newspapers and in this study, these sources of secondary data were used to compile the literature review in order to identify the gap in knowledge that this study wanted to address. The researcher was primarily responsible for the collection of the primary data for this study. However, two assistants were recruited to assist in the distribution of the self-administered questionnaire. To ensure the preparedness of the assistants, the following measures were taken:

- Recruited assistants that were literate and educated (University graduates with knowledge of the banking industry were recruited as assistants);
- Recruited assistants that were polite and able to establish a good relationship with the respondents;
- Recruited assistants that were fluent in the main languages of the respondents (Shona, English and Ndebele);
- Assistants attended training to ensure they understood all concepts;
- Identified the location of the banks to be surveyed in advance;
- Control of the data quality was ensured by checking for errors during the data collection process. This was achieved by checking that forms were completed fully and correctly; and
- The assistants signed a confidentiality agreement

.

4.7.1 Quantitative Data Collection

Quantitative data for this study was collected by administering a questionnaire. A questionnaire is widely used in descriptive and analytical research as a way of gathering opinions and views of respondents (Enshassi, Mohamed and Karriri, 2010). Powell and Connaway (2004) and Fowler (2002) argue that the use of questionnaires facilitates efficient collection of data because is relatively easy to collect and analyse in a short space of time. In addition, the format of the questionnaire eliminates variation in the questioning process even

when respondents interpret the same set of questions differently (Mavodza and Ngulube, 2011).

However, one common weakness of questionnaires is that they seek answers just by simply asking closed questions (Gillham, 2000). Saunders *et al.* (2016) recommend that it is generally good practice not to rely on questionnaire data only but to use a questionnaire in conjunction with at least one data collection instrument for example, observation or semi-structured interviews. This study collected qualitative data (semi-structured interviews) to complement the quantitative data (survey questionnaire). A self-administered questionnaires was distributed to bank customers who had the option to either return the questionnaire to the administrator immediately after completion or e-mail it to the researcher.

4.7.2 Qualitative Data Collection

Semi-structured interviews were used as the data collection tool for the qualitative phase. The three main types of interviews identified in the literature are structured, semi-structured and unstructured. Johl *et al.* (2012) state that structured interviews are mostly used for survey research, telephone interviews, market research and political polling. Structured interviews involve using a sequence of questions, which normally guide the interviewee on a pre-established path of questioning (Esterberg, 2002). This implies that situations are defined in advance leaving little or no room for the researcher to pursue other interesting topics arising from the discussions. Johl *et al.* (2012:6373) argue that “this can be a drawback, because structured interviews grant too much control to the interviewee and issues that might be considered important to the interviewer may be overlooked”. Further, Esterberg (2002) criticised structured interviews in that they tend to guide interviewees into giving responses that they think the interviewer wants to hear commonly known as ‘social desirability bias’. However, the structured interview has an advantage in that the researcher is fully in control of the process and is mostly able to conduct the interview in the allocated time as there is little opportunity to explore other emerging ideas.

Unstructured interviews on the other extreme are mostly conducted in a field setting and more often the questions posed to interviewees are more spontaneous and arising from the flow of the interview (Esterberg, 2002). Thus, in unstructured interviews, the interview questions are not prepared in advance as the questions arise naturally from the conversations at hand (Johl *et al.,* 2012). The main advantage of unstructured interviews is the provision to cover greater breadth because of its free-flowing nature. However, the major criticism of unstructured

interviews is that, if not properly managed, the interviewer might fail to get an adequate response from the interviewee based on what he or she is looking for (Johl *et al.,* 2012).

In view of the extremes of both the structured and unstructured interviews mentioned above, this study used semi-structured interviews in the collection of qualitative data. This is because semi-structured interviews allowed the interviewer to follow guidelines, but the interviewer was also able to follow topical trajectories in the conversation that strayed from the guide when it seemed more appropriate. Since not all questions are designed and phrased prior to the actual interview, semi-structured interviews enabled the interviewer to be led by the interview process in formulating the majority of the research questions, allowing both the interviewer and the interviewee the flexibility to go into detail if necessary. Further, the preference for semi-structured interviews was also based on the advantages of semi-structured interviews highlighted by Matthews and Ross (2010:224) who stated that:

- An informal interview guide will enable the interviewees to elaborate on their experience in their own way;
- The semi-structured interview format will enable the interviewer to conduct in-depth discussions and to explore specific issues related to a study; and
- Face-to-face interviews enables the interviewer to monitor the interviewer's behaviour so as to be sensitive to his/her needs especially when tackling potentially distressing topics.

4.8 MEASUREMENT AND SCALES

Given that several disciplines pursue studies concerned with trust, it is not surprising that various methodologies are employed in the measurement of trust. According, to Vickerstaff, Macvarish, Taylor-Gooby, Loretto and Harrison (2012) the two most recognised methods of measuring trust are trust scales and trust games. Trust scales are mostly concerned with the measurements of attitudes using questions or items and trust games are mainly concerned with the way in which individuals act out trust behaviours. Economists are largely instrumental for the development of the trust games method, which is based on creating experimental conditions in which 'pure trust' can be measured (McCabe Rigdon and Smith, 2003). The objective is to correlate trust behaviour with trust attitudes and trust games are usually utilised in conjunction with psychometric measures of trust (Vickerstaff *et al*., 2012). However, the validity of using experiments like trust games is often criticised by other researchers who argue that using experiments fail to simulate the actual conditions as there may be biases induced by the structure, framing and practical implementation of experiments in the way the non-representative sample is selected (Ermisch and Gambetta, 2006). This study opted to make

use of trust scales as they have been adopted in a number of related studies (Ennew and Sekhon, 2007; Kharouf *et al.*, 2014; Roy *et al.*, 2011).

According to DeVellis (2012), scales are developed by researchers for the measurement of a phenomenon which is believed to exist, but cannot be observed directly. He defines a scale as a collection "of items combined into a composite score and intended to reveal levels of theoretical variables not readily observable by direct means" (DeVellis, 2012:11). Measurement is the process in which "numbers are assigned to objects that represent categories, rank orders, as well as how much the object is preferred on the attribute being measured" (Aaker, Kumar and Day, 2007:758). Vickerstaff *et al.* (2012:22) suggest that "Underlying the capacity to measure trust, is the necessity to tailor the method of measurement to the particular domain in which the trust relationships of interest take place". This implies that researchers should understand the dynamics of context in which the trust construct is being investigated in order to adopt the most suitable measurement instrument.

In the methodological literature, there are documented challenges in developing reliable and valid measures for trust and trustworthiness (Ermisch and Gambetta, 2006). There is also a need for trust scales to distinguish between personal relationships and relationships between customers and institutions (Alesina and La Ferrara, 2002). According to Hall, Camacho, Duggan and Balkrishnan, (2002), some scales are more efficient in distinguishing between trust and trust predictors and the outcomes of trust, while other scales fail to include these important aspects. Another perpetuating challenge in using trust scales is separating trust attitudes from behaviours that actually exhibit trust perceptions (Vickerstaff *et al*., 2012). Calnan (2005:19) argues that: "If trust is claimed to embrace both attitudes and behaviours then in order to allow for socially desirable responses, it may be more appropriate for research to focus on enacted trust behaviour than espoused levels of trust". In light of the documented challenges highlighted above, this study opted to adapt measurement scales that have been found to be reliable in previous studies, for example, Ennew and Sekhon (2007).

According to Zikmund and Babin (2007), there are four main types or levels of scale measurement: nominal, ordinal, interval, and ratio level scales. This study used a Likert scale which is a form of ordinal scale. Kumar (2005:146) defines the Likert or summation scale as "a scale that is used upon the assumption that each statement on the scale has equal attitudinal value, importance or weight in terms of reflecting an attitude towards the issue in the question". With the Likert scale, each level is assigned a numerical score and each question provides a tally. Respondents are expected to indicate the extent to which they are in agreement or disagreement with statement(s) concerning a particular object (Hair,

Wolfinbarger, Ortinau and Bush, 2008). The scale consists of a number of items related to a particular construct being measured; for example, in this study, the construct 'competence' was measured by the following four items: (My bank is knowledgeable; My bank can be relied upon to give honest advice; My bank is efficient and My bank has the information it needs to conduct business). The items were rated on a five-point Likert scale (5: strongly agree to 1: strongly disagree). A high score is an indication that the respondent feels that his/her bank is highly competent, whereas a low score indicates the opposite. The Likert scale is very popular among marketing researchers (Hair *et al.,* 2008; Zikmund and Babin, 2007). The structured questions in the scale enabled the researcher to collect quantitative data required for this study.

4.9 DESIGNING THE QUESTIONNAIRE

Leedy and Omrod (2015) recommended that a questionnaire should be short, simple, consistent, and unambiguous while also providing clear instructions so that respondents will be encouraged to complete the questionnaire. The same authors also stressed the importance of pilot testing the questionnaire to ensure that it is reliable data collection tool. These guidelines were also instrumental in the development of the proposed questionnaire for this study. The questionnaire is provided in Appendix B.

Section A

Section A consisted of demographic questions that included age, gender, monthly income, bank used, and number of banks used and number of years with the bank. These were used for descriptive analysis.

Section B

Section B was the main part of the questionnaire and contained the measurement scales. This section consisted of a series of statements with 5-point Likert scales to indicate levels of agreement with the statements and will try to elicit respondents' perceptions of their respective banks. It consisted of 27 statements to measure the antecedents of trustworthiness, four statements to measure trustworthiness, four statements to measure affective commitment and four statements to measure behavioural intentions.

Section C

Section C consisted of an open-ended question that was included at the end of the questionnaire. The purpose of including an open-ended question in the questionnaire was to try to get more insights into the bank customers' perceptions of their trustworthiness concerns

regarding their respective banks which might not have been captured in the close- ended questions. The data collected in the open ended questions was also used to inform the interview guide in the qualitative phase.

4.9.1 Measurement of Trustworthiness Dimensions

The items of the survey instrument related to the measurement antecedents of trustworthiness were mainly from the trustworthiness scale developed by Ennew and Sekhon (2007). Their scale consists of 23 items measuring expertise and competence, integrity and consistency, communication, shared values and benevolence concerns which where all adopted in this study. However, the scale used for the present study to measure the antecedents of trustworthiness consisted of 27 items measuring competence, shared values, communication, integrity and consistency, benevolence concerns and structural assurance, thus an added item (structural assurance) was included in the scale based on the research problem discussed in chapter 1. The items in the structural assurance scale were adapted from by the scale developed by McKnight *et al.* (2002) which was re-worded accordingly to suit the current research context, i.e., retail banking.

Table 4.2: Scale to measure antecedents of trustworthiness

	Antecedents of trustworthiness	**1**	**2**	**3**	**4**	**5**
	Competence (Ability)					
B1	My bank is knowledgeable					
B2	My bank can be relied upon to give honest advice					
B3	My bank is efficient					
B4	My bank has the information it needs to conduct business					
	Integrity (Consistency)					
B5	My bank shows high integrity					
B6	My bank is honest					
B7	My bank conducts transactions fairly					
B8	My bank acts in the best interest of the customer					
B9	My bank keeps its word					
B10	My bank is consistent in what it does					
	Value Alignment					
B11	My bank has the same values as me					
B12	My bank does what it takes to make me happy					
B13	My bank has the same concerns as me					
B14	My bank is receptive to my needs					
	Benevolence					
B15	My bank Is responsive when contacted					
B16	My bank shows respect for the customers					
B17	My bank treats its customers fairly					
B18	My bank competently handles all my requests					
B19	My bank communicates clearly					
	Communication					
B20	My bank communicates regularly					
B21	My bank informs me regularly on new developments					
B22	My bank acts as I would					
B23	My bank informs me immediately of any problems					

	Antecedents of trustworthiness	**1**	**2**	**3**	**4**	**5**
	Structural assurance					
B24	I believe my bank is very secure					
B25	I believe my bank complies with the banking legal framework					
B26	I believe my funds are safe in my bank					
B27	I believe the legal framework in the country protects the depositor.					

Source: Adapted from Ennew and Sekhon (2007) and McKnight *et al.* (2002).

4.9.2 Measurement of Trustworthiness

The four items of the study survey instrument related to disposition of trustworthiness drivers were adopted from the trust and trustworthiness scale developed by Ennew and Sekhon (2007).

Table 4.3: Scale to measure deposition of trustworthiness

	Deposition of trustworthiness	1	2	3	4	5
C1	My bank has a reputation for being honest					
C2	My bank has a reputation for looking after its customers					
C3	My bank has a reputation for being reliable					
C4	Overall I feel my bank is trustworthy					

Source: Adapted from Ennew and Sekhon (2007).

4.9.3 Measurement of Affective Commitment

Affective commitment was measured using a modified version of the scale developed by Meyer, Allen and Smith (1993). Although the original scale included all three dimensions to measure commitment, the present study only considered four items related to the affective commitment dimension for reasons already discussed in chapter 3 (justification of the conceptual framework and hypotheses development in section 3.4.2)

Table 4.4: Scale to measure affective commitment

	Affective commitment	1	2	3	4	5
D1	I identify myself with the bank mission and activities					
D2	I have in myself a sense of belonging to the given bank					
D3	I like to cooperate with the bank staff officers					
D4	I would be very happy to spend the rest of my life banking with my bank					

Source: Adapted from Meyer *et al.* (1993).

4.9.3 Measurement of Behavioural Intentions

Behavioural intention scales are prominently used in marketing studies as they are easy to construct and interpret. The behavioural intention scales are basically designed to measure how likely people will behave towards a product /service or perceptions and can be described

as a special from of rating scale (Hair *et al.*, 2008:157). Behavioural intentions in this study were measured based on items common in the marketing literature (Gaur, Xu, Quazi and Nandi, 2011; Guenzi and Georges, 2010; Sunny Hu, Huang and Chen, 2010) and were adapted to suit the purpose of this study.

Table 4.5: Scale to measure behavioural intentions

	Behavioural intentions	1	2	3	4	5
D5	I intend to continue using my bank in the future					
D6	I will try new products services that are provided by my bank					
D7	I am fully ready to recommend my bank to everybody who might ask.					
D8	I will say positive things to other people about the services provided by my bank					

Source: Adapted from Gaur *et al.* (2011); Guenzi and Georges (2010) and Sunny Hu *et al.* (2010).

4.10 PRE-TESTING THE QUESTIONNAIRE

Before the actual survey was conducted, the questionnaire was pre-tested among 20 people who had active bank accounts in Zimbabwe. Hair *et al*. (2008:350) describe pretesting as a simulation of the empirical research process. According to Kothari (2004:101), a pilot survey is “in fact the replica and rehearsal of the main survey”. By pretesting the questionnaire, the researcher sought to:

- Check for logic, relevancy and comprehension;
- Get a fresh perspective on the language used and adjust where necessary; and
- Determine the average time required to complete the survey, if necessary the researcher will be in a better position to add or cut back on the scope.

The pilot test survey was administered in person and the respondents were asked to take the survey as they would under normal circumstances even though it was a mock survey. A follow-up e-mail was sent to the respondents to establish:

- If the respondents understood what each question meant;
- If the respondents found any question offensive or insulting; and
- The average time taken to complete the survey.

The feedback assisted the researcher in refining the survey questionnaire in order to improve the quality and content of the questionnaire, for example, the initial questionnaire was too long

and was likely to put off potential participants. In the end, the questionnaire was reduced in length by rephrasing some questions without compromising on quality.

4.11 VALIDITY

According to Leedy and Ormrod (2015), validity is the extent to which a measurement instrument accurately measures the characteristic it is intended to measure and enables justifiable inferences about the characteristic. Furthermore, validity is concerned with validating the quality of data and results in a research project (Creswell and Plano, 2011). Leedy and Ormrod (2015) further indicated that the validity of a measurement instrument can take several different forms which include face validity, content validity, criterion validity and construct validity. Face validity is concerned with whether or not an indicator appears to reflect the content of the concept in question (Bryman and Bell, 2015). Content validity is the degree to which a measure covers the breadth of the domain of interest (Quinlan, Babin, Carr, Griffin and Zikmund, 2015). According to Salkind (2018:106), criterion validity is mainly concerned with either how well a test estimates present performance(concurrent validity) or how well it predicts future performance(predictive validity).The same authors define construct validity as “the extent to which the results of a test are related to the underlying set of related variable” (Salkind, 2018:106).

Internal validity is concerned with the legitimacy of a study based on how the study sample was selected, data was recorded or/and how the data was analysed (Neuman, 2014). According to Handley (2012), external validity involves ascertaining whether the results of a study can be transferable to other groups; that is, whether the study’s inferences can be generalised to the general population. For the quantitative phase of this study, external validly was ensured by pretesting the questionnaire and by using a sample of 400 respondents selected from four banks which resulted in 267 usable questionnaires that allowed for statistical analysis techniques like SEM to be performed; hence, the study findings can be generalised to the study population. Moreover, this study used the mixed-methods approach, in which the combination of qualitative and quantitative studies had the potential to enhance external validity. Several steps were also taken to ensure respondent validation (internal validity). The respondents were guaranteed anonymity, and all identifiers were erased from the transcripts, which were coded for respondents’ background information. This encouraged respondents to answer fully and truthfully. Content validity on the part of the questionnaire was also ensured based on the constructs selected for measurement in this study. These were largely guided by previous empirical literature and adapted to meet the requirements of this study as outlined in section 4.9.

In qualitative studies, validity is perceived as being an unclear and ambiguous (Onwuegbuzie and Johnson, 2006). However, the external validity (commonly known as transferability) of this study with regard to the qualitative phase was enhanced in the following ways: The use of purposive sampling allowed the researcher to select respondents that represented what the researcher was interested in (Silverman, 2001). With reference to this study, when arranging interviews, the researcher purposively choose four bank customers from each bank (one corporate customer and three individual customers). This ensured that the researcher was in a better position to obtain knowledge from the most relevant participants who were also able to bring varying perspectives to the discussions. Bryman (2008) argues that generalisation in qualitative studies can be enhanced by studying more than one case. In this study, the researcher investigated the central issues affecting bank trustworthiness from not only one bank but from four different banks.

4.12 RELIABILITY

According to Hair *et al.* (2014), reliability is the extent to which a variable or set of variables is consistent in what it is intended to measure. It is the extent to which a measurement instrument yields consistent information about the characteristic being measured (Leedy and Ormrod, 2015). Sound research depends on reliable and valid measurements. Measurements are reliable if they are repeatable and only vary by random error. Reliability is a measure of internal consistency; for example, in a questionnaire, it is measured by evaluating the data collection exercise to see if it gathered data which is deemed dependable, consistent and adequate for statistical analysis. Internal consistency is a measure of inter-correlatedness of scale items (Hair *et al.,* (2014). If a number of scale items measure the same construct, it is expected that all those scale items would be correlated with each other. Thus, a low measure of correlation will indicate low internal consistency within the scale items. In such a case, the scale item/s may need to be investigated for errors.

In quantitative research, internal reliability is concerned with whether all study variables are measuring the same thing (Salkind, 2018). The basic notion of reliability in quantitative social research is ensuring that a measurement is consistent (Jordan and Hoefer, 2001). Further, in a quantitative study, statistical instruments can be used to test the reliability of a measurement (Jordan and Hoefer, 2001; Tashakkori and Teddlie, 2009). The internal consistency measurement scales in this research were assessed by Cronbach's coefficient alpha (α). Cronbach's alpha was used to measure the reliability, that is, the internal consistency of each dimension. Internal consistency examines how unified the items in a test or assessment are (Salkind, 2018). A high coefficient for Cronbach's alpha is always ideal as it indicates that the

scale items are strongly related and therefore measure the same construct. The generally-acceptable Cronbach's α coefficient must be at least .70. Fulfilment of this necessary condition guarantees a reliable statistical analysis.

According to Bryman and Bell (2015), Cronbach's alpha is a commonly-used test for internal reliability which essentially calculates the average of all possible split-half reliability coefficients and it varies from 0 (denoting no internal reliability) to 1 (denoting perfect internal reliability). A 'high' value of alpha is often used (along with substantive arguments and possibly other statistical measures) as evidence that the items measure an underlying (or latent) construct. The guidelines provided by Manerikar and Manerikar (2015) were used to determine the level of reliability where the rules of thumb were that if it was ≥ .9 then it was excellent (high-stakes testing), ≥.7 it was good (low-stakes testing), ≥.6 it was acceptable, ≥.5 it was poor and <.5 it was unacceptable.

Furthermore, peer examination ensured the reliability of the research, as there were opportunities for scrutiny of the project by colleagues, peers and academics before the project was finalised (for example, DBL Colloquiums). Their fresh perspectives, in some instances, challenged assumptions originally made by the researcher. Furthermore, the researcher sought the services of an experienced statistician who is also an academic for guidance in the statistical analysis as well as reviewing the final thesis to ascertain that the data analysis and study findings were correctly interpreted and presented. As a way to estimate reliability, Hernon and Schwartz (2009) also recommend pretesting (the use of individuals who are not part of the actual sample to test questions to ensure that their meanings are understood. The study questionnaire was pre-tested on respondents who were not part of the actual sample used in the study. Amendments were then effected based on the comments from the respondents in the pretesting phase before the actual survey was carried out.

In qualitative research, reliability tends to be challenging, however, the criterion of reliability in any research can be satisfied by explicitly documenting the research procedures (Franklin and Ballan, 2001). The same authors refer to the procedures as an audit trail, which provides the basis for checking the researcher's dependability. In addition, Collingridge and Gantt (2008) state that in qualitative studies the focus on enhancing reliability should be on achieving consistency in the quality of results rather than on obtaining exactly the same results. In this study, the researcher documented and justified the methodological approach by documenting the critical processes and procedures that facilitated the construction, shaping and the connection of meanings associated with the phenomena. In addition, although this study was a quantitative dominant study, the qualitative phase of the study was also important as it

provided valuable insights into the findings of the quantitative findings. As such, it was important to ensure credibility of this phase of the study which was achieved by:

- Ensuring that those participating in research are identified and described accurately;
- Conducting pre interviews in order to determine whether the proposed interview questions were suitable for obtaining data that could provide answers in line with the research objectives and questions; and
- The inclusion of member checking into the findings, that is, gaining feedback on the data, interpretations and conclusions from the interview participants, was done as a way of ensuring credibility.

4.13 DATA ANALYSIS METHODS AND TECHNIQUES

Data analysis is described as a systematic procedure where respondents' views are grouped together in order to establish significant findings within a group of collected data (Quinlan, Babin, Carr, Griffin and Zikmund, 2015). Both qualitative and quantitative analysis techniques were used to analyse data collected for this study. As already mentioned, to a greater extent, a quantitative analysis was done since the main research is quantitative while the qualitative analysis was done to clarify and further explain the quantitative findings. The two sets of data were analysed separately and the quantitative and qualitative results were integrated to explain which trustworthiness dimensions have the greatest influence on bank customers' trust in relation to the overall influence of bank trustworthiness on affective commitment and behavioural intentions.

4.13.1 Quantitative Data Analysis

Bryman and Bell (2015) describe quantitative data analysis as the process of using quantitative techniques to break down numerical data collected in order to facilitate the testing of relationships between variables as well as developing ways to present the findings from the analysis to other readers, among other things. In this study, data from the quantitative phase were entered into a Microsoft Excel 2016 spreadsheet and then exported to SPSS 24 for analysis. The data was first screened for outliers and missing data. Some quality checks were also conducted such as uncommon variations in the data. The central limit theorem was applied to the data to achieve normality. The central limit theorem postulates that "as the sample size (the number of values in each sample) gets large enough, the sampling distribution of the mean is approximately normally distributed" (Levine, Szabat and Stephan, 2016: 255). This is true regardless of the shape of the distribution of the individual values in

the population (Levine, Szabat and Stephan, 2016). In this study the final sample used for statistical analysis was 267 and thus normality was achieved since the observations were more than 30.

Various statistical methods and techniques were used to analyse the data in the quantitative phase, including descriptive statistics, frequency distributions, measures of central tendency and dispersion, cross tabulations, reliability analysis, factor analysis, inferential statistics, one-way analysis of variance (ANOVA), independent t-tests, correlation analysis and SEM. Below is a brief discussion of the main statistical analysis techniques employed in this study. Reliability analysis using Cronbach's coefficient alpha have already been discussed in sections 4.11 and 4.12 respectively.

4.13.1.1 Descriptive statistics

According to Gravetter and Wallnau (2017), descriptive statistics are statistical procedures used to summarise, organise and simplify data. Descriptive statistics present data in two forms: numerical techniques and graphical techniques. Graphical techniques usually present data in way that allows the reader to extract information while numerical techniques makes use of summary statistics (Keller, 2018). For this study, descriptive statistics were computed for the demographic factors and for all the scale items in the questionnaire and presented in the form of frequencies, proportions, means and standard deviations and coefficients of variation for numerical data.

4.13.1.2 Inferential statistics

Keller (2018) describes inferential statistics as a body of methods used to reach conclusions or inferences regarding characteristics of a population based on the sampled data. This study made use of two forms of inferential statistics: ANOVA and independent t-tests, which are discussed below.

- Independent t-test – Levine, Szabat and Stephan (2015) describe the independent t-test as a two-sample test that compares means of the selected sample from two populations with the assumption that the random samples are independently selected and are normally distributed. Thus, two populations are regarded as independent if the measured values of the items observed in one population have no impact on the measured values of the items observed in the other population (Davis, Pecar, Santana and Burke, 2014). In the current study, the independent t-test was done to check whether the constructs differed, for example, by gender or whether a participant had

more than one account. The observations were randomly selected and were independent of each other and normality was achieved by applying the central limit theorem. According to Gravetter and Wallnau (2017), the independent t-test has three assumptions which are that the observations with each sample must be independent, the two populations from which the samples are selected must be normal and the two populations from which the samples are selected must have equal variances. In this case the sample elements were randomly selected using a probability sample and thus the observations were independent. Normality was achieved by applying the central limit theorem and homogeneity of variance was tested using Levene's test of equality of variances. In the case where the variances were equal, statistics under equal variance assumed were discussed and in the case where the variances were unequal, statistics under equal variances not assumed were discussed. The significance of the test was measured using the effect size. The effect size estimates the degree to which the phenomenon being studied (e.g. correlation or difference in means) exists in the population (Hair *et al.,* 2014). Effect size indicates the amount of influence changing the conditions of the independent variable had on dependent scores (Heiman, 2015). The effect size, denoted by η^2 (eta-squared) was measured as:

$$\eta^2 = \frac{t^2}{t^2+(N1+N2-2)}$$

where:

t^2= t-value squared;

N_1 = Sample size for first group, and

N_2 = Sample size for second group

Cohen (1988: 284-7) propose the guidelines proposed for interpreting eta-squared, η^2 as:

.01 = small effect

.06 = moderate effect

.14 = large effect

The independent t-test was done at the 5% level of significance and the test was significant if the p-value was less than .05. Composite variables were created by finding the average of the study constructs. A test was highly significant if the p-value was less than .001.

- ANOVA is a statistical technique that is used to determine whether samples from two or more groups come from populations with equal means (Hair *et al.,* 2014). The technique is derived from the way in which the calculations are performed, that is, the technique analyses the variance of the data to determine whether one can infer that

the population means differ (Keller, 2018). This implies that ANOVA reduces some of the random variability to enable significant difference to be found more easily as well as assisting in identifying interactions between factors. For this study, ANOVA was done to determine mean differences across categories with more than two categories. Thus, ANOVA was done to determine whether the constructs differed by age, highest formal qualification, bank, type of account and banking period. The test was done at the 5% level of significance. In the case where the assumption of equality of variance across groups was violated, the Welch robust test of equality of means was used to determine whether the means indeed differed and the Games-Howell test was used as a post-hoc test. In the case where the assumption was not violated, the F-test was used and the Tukey-B post-hoc analysis was used to determine where the differences existed. The means were different if the p-value was less than .05 and if it was less than .01, it was highly significant. If the variances are equal the effects size for ANOVA was computed by the Greek letter eta squared, η^2 and it is given by:

$$\eta^2 = \frac{SS_{Between}}{SS_{Total}}$$

where $SS_{Between}$ is the sum of squares between groups which reflects the differences between the means from the various levels of an independent variable and SS_{Total} is the sum of squares for total which reflects the total differences between all scores in the experiment. Eta squared, η^2 reflects the proportion of the total differences in the scores that are associated with differences between sample means, or how much of the variability in the dependent variable is attributable to the manipulation of the independent variable (Jackson, 2014: 234).

I the case where variances were not equal and the Welch F test was used, the effect size was calculated using the adjusted omega squared, that is, omega-squared (ω^2) given by:

$$\omega^2 = \frac{df_{bet}(F-1)}{df_{bet}(F-1) + N_T}$$

where df_{bet} is the degrees of freedom for factor A, that is, the number of levels of factor A – 1, F is the Welch F test statistic and N_T is the total number of subjects (Keppel & Wickens, 2004).

Note: The guidelines proposed by Cohen (1988) for interpreting eta-squared, η^2 and omega-squared (ω^2) are:

.01 = small effect

.06 = moderate effect

.14 = large effect

A non-significant p-value meant that there was homogeneity in the rating of the constructs among customers with regard to the socio-demographic variables.

4.13.1.3 The structural equation modelling (SEM)

The SEM was then done using SPSS AMOS version 24 to determine the statistical model that sought to explain the relationship between the variables. According to Tabachnick and Fidell (2014:731), "SEM is a collection of statistical techniques that allow a set of relationships between one or more independent variables, either continuous or discrete, and one or more dependent variables either continuous or discrete, to be examined". When compared with other multivariate procedures, SEM is regarded as a more powerful alternative as it takes into account the correlated independents, measurement error and multiple latent independents (Byrne, 2013). Similarly, Hair *et al.* (2010:634) stated that, "SEM can be thought of as a unique combination of both types of techniques because SEM's foundation lies in two familiar multivariate techniques: factor analysis and multiple regression analysis''.

According to Hair *et al.* (2006), all SEM techniques have two main traits in that firstly, they estimate several interrelated dependence relationships and secondly, the relationships may include unobserved phenomena for which measurement error is considered during the estimation. Thus, when compared with multiple regression, SEM provides several advantages in that regression estimates do not take into consideration measurement error which SEM does; thus, multiple regression may be regarded as biased (Hair *et al.,* 2006). Furthermore, multiple regression analysis only allows for estimation of direct effects on one dependent variable at a time, yet SEM allows for estimation of relationships between multiple independent and multiple dependent variables simultaneously (Hoyle, 1995).

The SEM is divided into two parts. The first stage confirms the measurement theory and the second part is the structural model. The first part makes use of confirmatory factor analysis to provide a confirmatory test for the measurement theory.

The stages of a SEM model as proposed by Hair *et al*. (2014) are:

- Stage 1: Defining individual constructs;
- Stage 2: Developing the overall measurement model;
- Stage 3: Designing a study to produce empirical results;
- Stage 4: Assessing the measurement model validity;

- Stage 5: Specifying the structural model; and
- Stage 6: Assessing structural model validity

In this study, Stage 1 involved designing the questionnaire by identifying the items to be used as measured variables.

Stage 2 involved making measured variables with constructs. The path diagram for the measurement model was drawn.

Stage 3 assessed the adequacy of the sample size, selecting the estimation method and the missing data approach. In this case all variables with missing values on the constructs were not used in the structural equation model.

Stage 4 involved assessing the measurement model validity by assessing the goodness of fit and construct validity of the measurement model. According to Zait and Bertea (2014), construct validity has three components which are convergent, discriminant and nomological validity. Convergent validity is the degree to which scores on one scale correlate with scores on other scales designed to assess the same construct. In this case convergent validity was measured using Average Variance Extracted (AVE) and construct reliability (CR). Average Variance Extracted (AVE) is a summary measure of convergence among a set of items representing a reflectively measured latent construct and it is the average percentage of variation explained (variance extracted) among the items of a construct (Hair *et al.,* 2014). The formula is given by

$$AVE = \frac{\sum_{i=1}^{n} L_i^2}{n}$$

where L_i represents the completely standardised factor loading for the ith measured variable and n is the number of item indicators for a construct. Thus, it is calculated as the total of all squared standardised factor loadings (squared multiple correlations) divided by the number of items. Convergent validity is achieved if all AVEs were greater than .5, that is, $AVE > .5$

Reliability is also an indicator of convergent validity. According to Hair *et al*. (2014), construct (composite) reliability (CR) is a measure of reliability an internal consistency of the measured variables representing a latent construct and is given by

$$CR = \frac{(\sum_{i=1}^{n} L_i)^2}{\left(\sum_{i=1}^{n} L_i\right)^2 + \left(\sum_{i=1}^{n} e_i\right)}$$

where$(\sum_{i=1}^{n} L_i)^2$ is the squared sum of factor loadings (L_i) and $\sum_{i=1}^{n} e_i$ is the sum of the error variance terms of a construct e_i. High construct reliability indicates that internal consistency exists ($\geq$ .7), meaning that the measures all consistently represent the same latent construct. In order to achieve validity all construct reliabilities should be greater than AVEs, that is, $CR > AVE$.

Discriminant validity was measured comparing square root of AVEs and inter-construct correlations as proposed by Fornell and Larcker (1981). Discriminant validity is the degree to which scores on an instrument correspond more highly to measures of the same construct than they do to scores on measures of other constructs (Rubin and Babbie, 2016). High discriminant validity provides evidence that a construct is unique and captures some phenomena (Hair *et al.,* 2014). Discriminant validity is achieved if maximum shared variance (MSV) is less than AVE, average shared variance (ASV) is less than AVE and the square root of AVEs are greater than inter-construct correlations, that is, AVE is greater than squared inter-construct correlations (SICs) (Fornell and Larcker, 1981). In summary it is:

- $MSV < AVE$
- $MSV < AVE$
- $AVE > SICS$

Nomological validity is the test of validity that examines whether the correlations between the constructs in the measurement theory make sense and construct correlations can be useful in this assessment (Hair *et al.,* 2014). The matrix of construct correlations can be useful in this assessment. Nomological validity answers the question whether the overall model is considered valid.

According to Hair *et al.* (2014), confirmatory factor analysis tests how well measured variables represent a smaller number of constructs and that it forms the basis for a researcher to either “confirm” or “reject” the preconceived theory. There are several methods that can be used to estimate SEM, the most common being the maximum likelihood estimation (MLE) which was used in this study. The MLE is a flexible approach to parameter estimation in which the “most likely” parameter values achieve the best model fit are found (Hair *et al.,* 2014). It is very reliable when all the assumptions are met.

Several methods can be used to determine the goodness of fit of the model, namely:

- Chi-square test;
- CFI (Comparative Fit Index);
- RMSEA (Root Mean Square error of approximation);

- TLI (Tucker Lewis Index);
- GFI (Good ness of Fit Index);
- IFI (Incremental Fit Index);
- NFI (Normed Fit Index);and
- AGFI (Adjusted Goodness of Fit Index).

The chi-square statistics and the RMSEA are fit indices while incremental fit indices are IFI, TLI, NFI, and CFI, RNI and parsimonious indices are AGFI.

- Model chi-square (X^2) – is the test of absolute fit of the model. It is the overall measure of difference between the observed and estimated covariance matrices (Hair *et al.,* 2014). For the chi-square tests, the model fits the data if the *p-value* is more than .05, that is, the model is non-significant, but however it is adversely affected by sample size (Hair *et al*., 2014). To minimise the impact of sample size the normed chi-square (X^2/df) is used with the acceptable ratio for this statistic ranging from 5. to as low as 2. Thus, the need to look at other goodness of fit tests. According to Pallant (2013), there is a need to perform further and more robust tests to complement the chi-square and at least three goodness of fit indices should depict a good fit to the model. Hair *et al.,* (2014) recommend using one incremental index, one absolute index in addition to the chi-square value and its associated degrees of freedom. They also recommend using three to four fit indices to provide evidence of model fit. According to Tabachnick and Fidell (2014), the most reported indices are the CFI and RMSEA.

- The CFI is an IFI that is regarded as an improved version of the revised NFI (Hair *et al.,* 2014). It takes into account sample size that perform well even if the sample size is small (Hooper, Coughlan and Mullen, 2008). Hooper *et al.* (2008) further suggest that CFI makes the assumption that all latent variables are uncorrelated (null/independence model and compares the sample covariance matrix with this null model). It ranges from 0 to 1 with values close to 1 indicating a better fit; thus, CFI values above.90 are usually regarded as indicative of a model with a good fit (Hair *et al.,* 2014).

- RMSEA is the most widely used measure that attempts to correct the tendency of the chi-square test statistic to reject models with a larger sample size or a large number of observed variables (Hair *et al.,* 2014). It tells us how well a model fits the population. The lower values of RMSEA indicate a better fit. The cut-off point for the RMSEA has been a subject of debate among researchers; however, according to Hair *et al.* (2014), there is

generally agreement on a cut-off value of .05 or .08. Values close to zero indicate a better fit.

- The GFI is regarded as an early initiative to produce a fit statistic that was less sensitive to sample size as an alternative to the chi-square test and calculates the proportion of variance that is accounted by the estimated population covariance (Coughlan *et al.*, 2008). The statistics range from 0 to 1 with higher values indicating a better fit (Hair *et al.*, 2010). The GFI should be above .90 for acceptable theories but other stimulation studies argue that.95 is more acceptable (Hair *et al.,* 2010). The adjusted version (AGFI) has a similar interpretation. The summary of the selected fit indices is shown in Table 4.6 below:

Table 4.6: Summary of the selected fit indices

Fit Index	Acceptable Threshold Levels	Interpretation
Chi-square	X^2 to degrees of freedom in the range of 5 to 1	Low X^2 relative to degrees of freedom with insignificant p-value (p > .05)
RMSEA	Values less than .07	Has a known distribution and values less than .03 represents an excellent fit
GFI	Values greater than .95	Scaled between 0 and 1, with higher values indicating the better fit model
CFI	Values greater than.95	Normed, 0 -1 range

Source: Adapted from Hooper *et al.* (2008)

Stage 5 involved specifying the structural method. The measurement model was converted into the structural model.

Stage 6 involved assessing the structural model validity. Assessment of model fit and significance, direction, and size of structural parameter estimates was done. The fit indices used in the measurement model were used in the structural model. These are presented in Chapter 5.

4.13.2 Qualitative Data Analysis

The sequential explanatory design dictates that the results from phase one (quantitative study) guides the data required in phase two (qualitative study). In the current study, results from the survey were analysed and subsequently guided the questions formulated for the semi-structured interview. Each objective from the survey yielded results where the interviewees could provide important contexts and additional explanations about their banks' trustworthiness and how it influences customers' behavioural intentions and affective commitment towards their particular bank. Hatch (2002:148) describes qualitative data

analysis as "Organising and interrogating data in ways that allow researchers to see patterns, identify themes, discover relationships, develop explanations, make interpretations, mount critiques, or generate theories''.

Face-to-face, semi-structured interviews were used and facilitated by an interview guide that was developed and used during the process of data collection. The basis of the majority of questions developed for the interview guide was the somehow unexpected findings from the quantitative phase. For example, it was unexpected that a significant number of the survey respondents still trusted their banks and were still emotionally attached to their banks considering all the documented challenges in the banking industry. Thus, the qualitative study sought to find explanations for such unexpected findings. The interview guide was evaluated by a bank marketing practitioner. Thereafter, the questions were modified and revised based on the reviewer's comments. In this study, interview transcripts were thematically analysed as per guidelines by Taylor-Powell and Renner (2003:1) who recommended the following stages:

Stage 1: Getting to know the data

The first stage highlights the importance of understanding the data as this is the basis of a good data analysis. In this study, this stage entailed the researcher to listening to the tape recorder several times with the objective of familiarising with the data.

Stage 2: Focusing the analysis

The second stage requires the researcher to evaluate what he/she intends to establish, this implies that the researcher has to identify key questions that the analysis will address (Taylor-Powell and Renner, 2003). In this study, the researcher focused on how each interviewee responded to each question, thereafter data pertaining to each specific question was put together.

Stage 3: Categorising information

The third stage is concerned with categorising information into themes or patterns. In this study, the researcher identified themes based on ideas, concepts and phrases used in the responses provided (Taylor-Powell and Renner, 2003). These were then organised into coherent categories that summarised the text (responses for each question). Coding is an important procedure in analysing qualitative data as it takes into account the researcher's thoughts regarding the meaning of data (Seale, 1999). Some researchers argue that qualitative data analysis is vague and sometimes personalistic; however, the reliability of the study can be enhanced if a researcher applies consistent coding (Franklin and Ballan, 2001).

Thus, the researcher applied a consistent coding method to enhance the reliability in the qualitative study during the data analysis process.

Stage 4: Identifying patterns and connections within and between categories

For this stage, the researcher focused on organising data into categories that sought to establish patterns and connections both between and within categories. According to Taylor-Powell and Renner (2003), it is advisable to assess the relative importance and relationships within the themes and in this study, this was established by the number of times each theme or sub-theme recurred.

Stage 5: Interpretation

Taylor-Powell and Renner (2003) describe data interpretation as the process of finding meaning and the significance of the data to the analysis. This stage entails using the identified themes and connections to explain the findings. In this study, the researcher started by compiling a list of what was regarded as key findings based on emerging themes. To ensure the validity of the interviews, the transcribed versions were sent to the interviewees for checking to avoid any discrepancies in their responses (Irani, Love, Elliman, Jones, and Themistocleous, 2005). Thereafter, an outline for presenting the results was developed and refined for inclusion in the final report. Thus, significant statements were extracted and meanings were formulated into themes that were used to produce a report.

4.14 ETHICAL CONSIDERATIONS

In every research project, ethical considerations are always regarded as an essential obligation (Hair *et al*., 2011). Overall, the current study was subjected to the ethical review by the UNISA, School of Business Leadership (SBL) Research Ethics Review Committee which was constituted according to the policies of the university and the laws of South Africa that govern research ethics. Permission to carry out the study was also obtained in writing from all the participating banks. However, in order to ensure that this research included all the essential ethical principles, as prescribed by Bell and Bryman (2007) and Hair *et al.* (2011), the following areas relating to ethics were addressed:

- Whether there is informed consent: for the quantitative phase, the main survey questionnaire did not make any reference to the identity of respondents except where the respondent was willing to provide details as a way of consenting to participate in the follow-up interviews. Any customer details supplied were kept confidential, and completed questionnaires were allocated codes for analysis purposes. Further, on signing the

information consent form, confidentiality issues were fully explained to respondents. For the qualitative phase, before the interviews started, all interviewees were guaranteed confidentiality, anonymity and non-attribution. Furthermore, permission was sought from each interviewee for the use of their data. All the interviews were audio-recorded with the consent of the interviewees and transcribed. It was explained to all interviewees that the information would become part of the data for the purpose of analysis, and it would not be published except as analysed data, without identification. Participants were asked to sign an information consent form. Furthermore, when signing the information consent form, confidentiality issues were fully explained to respondents, and any questions were answered.

- Whether there is harm to the respondents: the purpose of this research was purely for academic purposes. Therefore, this research did not pose a threat of any kind of physical or psychological harm. Further, the researcher ensured that only participants that were 18 years and older participated in the study.
- Whether there is an invasion of privacy: the respondents were assured of confidentially of their responses by guaranteeing their anonymity by a documented statement as outlined in the introductory letter attached as Appendix A to this study. The researcher also ensured that the assistant researchers signed a confidentiality agreement. Demographic data such as age and gender was requested only for classification purposes and for aggregated reporting so as to highlight significant differences between groups.
- Whether deception is involved: This research was free of any commercial or financial returns and this was communicated to all participants. The purpose and processes of the research were fully explained to the participants before they were asked to participate.

In addition, the collected data from both phases were kept in a password protected folder pending analysis. Further, all paper-based records were kept in a locked box only accessible to the researcher. Consequently, the ethical procedures prescribed were met and the ethical clearance certificate was awarded by the University as per attached Appendix D of this thesis.

4.15 CHAPTER SUMMARY

The research methodology chapter discussed the research methods and specific techniques that were employed in the study. The choice of the research philosophy, research strategy, research design, data collection instruments were fully discussed and the rationale for the choices made was also discussed taking into account the research objectives. Given that the chosen research method is the explanatory sequential mixed research, both quantitative and qualitative data collections methods were used and the specific techniques involved in each

method were also discussed and rationalised. The research methods acted as a framework for the research instrument and analysis of the results, taking into consideration research reliability and validity. The chapter concluded by discussing the ethical considerations that were taken into account so as to uphold the highest research ethics. Therefore, the proposed conceptual framework was empirically tested and the study results are presented in the next chapter.

CHAPTER 5: PRESENTATION OF QUANTITATIVE RESULTS AND QUALITATIVE FINDINGS

5.1 INTRODUCTION

In this chapter, results from the research findings are presented starting with results from the quantitative phase (survey questionnaire) followed by the results from the qualitative phase (interviews). The main objective of this study was to explore the concept of trustworthiness by investigating trustworthiness dimensions of banks that drive bank customers' trust in a banking sector that is experiencing a confidence crisis using the Zimbabwean banking sector as a point of reference. The specific objectives were firstly, to determine which trustworthiness factors can be regarded as having the strongest influence on the decision to trust a bank by its customers; secondly, to examine the influence of organisational trustworthiness on behavioural intention of its customers; thirdly, to examine the influence of organisational trustworthiness on affective commitment and lastly to examine the influence of affective commitment on behavioural intentions. For confidentiality reasons, the four banks under study will be identified as Bank A, Bank B, Bank C and Bank D.

5.2 QUANTITATIVE STATISTICAL ANALYSIS

Data from the quantitative phase was entered into a Microsoft Excel 2016 spreadsheet and then exported to SPSS 24 for analysis. The data was first screened for outliers and missing data. Quality checks were also conducted such as uncommon variation in the data. Descriptive statistics were computed for the demographic factors and for all the scale items in the questionnaire and presented in the form of frequencies, proportions, means and standard deviation. The data were tested for internal consistency, that is, reliability using Cronbach's alpha. Composite variables were calculated using the averages and summary statistics were used to determine the patterns and trends in the data. The central limit theorem was applied to the data to achieve normality and comparative analysis to determine whether views differed by socio-demographic variables. Independent t-tests were done to determine whether views differed for two-category variables and the one-way ANOVA was used to determine whether views differ for variables with more than two categories. Confirmatory factor analysis was then used to determine how well the measured variables represent a small number of constructs (Hair *et al.,* 2014). The SEM was done to determine the statistical model that sought to explain the relationship among the variables. Hypotheses were then tested between model constructs to determine their influence on one another.

5.3 RESPONSE RATE ANALYSIS

Initially, the target was to get a sample of 400 questionnaires from the four banks under study. However, the researcher managed to get 281 completed questionnaires. Thus, in comparison with the initial target, the data collection exercise achieved a 70% success rate in reaching out the targeted sample size. Therefore, the gained response rate for this study is considered satisfactory and acceptable. Data screening checks were applied to ensure usability, reliability and validity before subjecting it to appropriate statistical tests. There were 14 questionnaires with missing data in at least 5% variables. These were not included in the statistical analysis as value estimation techniques are appropriate for not more than five % missing variables per questionnaire. Thus, 267 questionnaires were used for statistical analysis. In addition to the screening exercise, normality tests were done to detect if there were any outliers per each variable in the questionnaire.

5.4 RELIABILITY

The internal consistency measurement scales in this research were assessed by Cronbach's coefficient alpha (α). Cronbach's alpha was used to measure the reliability, that is, the internal consistency of each dimension. Internal consistency examines how unified the items in a test or assessment (Salkind, 2018). A high coefficient for Cronbach's alpha is always ideal as it indicates that the scale items are strongly related and therefore measuring the same construct. The generally-acceptable Cronbach's α coefficient must be at least .70. Fulfilment of this necessary condition will guarantee a reliable statistical analysis. Cronbach's alpha is a commonly-used test for internal reliability, which essentially calculates the average of all possible split-half reliability coefficients and it varies from 0 (denoting no internal reliability) to 1 (denoting perfect internal reliability) (Bryman and Bell, 2015). A 'high' value of alpha is often used (along with substantive arguments and possibly other statistical measures) as evidence that the items measure an underlying (or latent) construct. The guidelines provided by Manerikar and Manerikar (2015) were used to determine the level of reliability were the rules of thumb were that if it is ≥ .9 then its excellent (high-stakes testing), ≥ .7 its good (low-stakes testing), ≥ .6 its acceptable, ≥ .5 its poor and < .5 its unacceptable. Table 5.1 shows the results of the internal consistency of the instrument using Cronbach alpha.

Table 5.1: Reliability Analysis Results of the Constructs

Construct	No. of items	Cronbach's alpha	Acceptable level
Competence (Ability)	4	.958	Excellent
Integrity (consistency)	6	.958	Excellent
Value alignment	4	.926	Excellent
Benevolence	5	.913	Excellent
Communication	4	.919	Excellent
Structural assurance	4	.858	Good
Deposition of trustworthiness	4	.956	Excellent
Trustworthiness	***31***	***.938***	***Excellent***
Affective commitment	4	.944	Excellent
Behavioural intentions	4	.950	Excellent
Total	***39***	***.990***	***Excellent***

All the constructs had reliabilities of more than .9 except the construct 'structural assurance' with a reliability of .858. According to the recommendations by Manerikar and Manerikar (2015), the reliabilities are at an acceptable level. The dimension for trustworthiness had 31 items and the reliability was .938 which is excellent. The instrument had 39 items in total and the overall reliability of the instrument was .990 which is also excellent and thus the instrument was reliable. There was a good internal consistency in the items measuring all constructs as observed by the alphas which are all greater than .7 within the 9 constructs. This test confirms that the questionnaire was a reliable data collection tool in this research and that the data were appropriate for further analysis.

5.5 DEMOGRAPHICS AND CHARACTERISTICS OF RESPONDENTS

As mentioned earlier, 267 questionnaires were suitable for statistical analysis in the study. The customers were asked to indicate their socio-demographic characteristics which included gender, age, highest formal qualification, name of bank used, whether customers had more than one account, type of account and how long the customer has been banking with the particular bank. The socio-demographic information is described in Table 5.2.

Table 5.2: Socio-demographic characteristics of the customers

Variable	Category	Frequency	%
Gender	Male	187	70 0%
	Female	80	30.0%
	Total	**267**	**100 .0%**
Age	Under 25 years	26	9.7%
	26 – 35 years	93	34.8%
	36 – 45 years	72	27.0%
	46 – 55 years	53	19.9%
	Over 55 years	23	8.6%
	Total	**267**	**100 .0%**
Highest formal qualification	Diploma	47	17.6%
	Bachelors	94	35.2%

Variable	Category	Frequency	%
	Masters	40	15.0%
	Doctorate	10	3.7%
	Other	76	28.5%
	Total	**267**	**100 .0%**
Bank	Bank D	63	23.6%
	Bank C	65	24.3%
	Bank B	70	26.2%
	Bank A	69	25.8%
	Total	**267**	**100 .0%**
More than one bank account	Yes	92	34.5%
	No	175	65.5%
	Total	**267**	**100 .0%**
Type of account	Personal account	229	85.8%
	Business account	20	7.5%
	Both personal and business	18	6.7%
	Total	**267**	**100 .0%**
Period with bank	Less than 1 year	34	12.7%
	1 – 5 years	99	37.1%
	6 – 10 years	68	25.5%
	11 – 15 years	39	14.6%
	16 – 20 years	15	5.6%
	Over 20 years	12	4.5%
	Total	**267**	**100 .0%**

About 70% (n=187) of the respondents were men while 30% (n=80) were women giving a total of 267 respondents. Thus, the ratio of women to men was 3:7. Looking at Table 5.2, the highest proportion of customers, that is, 34.8% (n=93) were aged 26 – 35 years; 27% (n=72) were aged 36 – 45 years and 19.9% (n=53) were aged between 46 – 55 years. Only 9.7% (n=24) were not more than 25 years while 8.6% (n=23) were above 55 years. The majority of the customers who participated in the study were aged between 26 and 45 years. This is in line with a report by FinScope (2011) which estimated the distribution of Zimbabwe's population by age as 18-20 (9%), 21-50 (79%) and 61 and above (12%).

The majority of the respondents, 35.2% (n=94), were holders of Bachelor's degrees while there were 3.7% (n=10) PhD holders. A considerable number, 28.5% (n=76) had other unspecified formal qualifications and 15% (n=40) had master's degrees. Thus, most of the customers had at least a degree. This can be attributed to the general observation that the respondents who were willing to participate in the survey had an appreciation of the importance of research maybe because they would have done research elsewhere especially at the tertiary education level. Additionally, the Zimbabwe National Statistics Agency's labour force survey (2014) estimated that about 98 percent of those aged 15 years and above were literate, confirming the high literacy levels in Zimbabwe as evidenced by the study respondents' educational qualifications.

As shown in Table 5.2, the number of respondents included in the study sample across different banks depicted an almost uniform distribution, which was the aim of the researcher. The proportions were 23.6%, 24.3%, 26.2% and 25.8% for Bank D, Bank C, Bank B and Bank A respectively. This was to be expected as the researcher distributed an equal number of questionnaires in each bank for reasons stated in Chapter 4.

The majority of the respondents had only one bank account. Specifically, 65.5% (n=175) of the respondents used only one bank while the remainder, 34.5% (n=92), used more than one bank. The use of more than one bank can be attributed to cash shortages in the banking sector, which might compel a number of bank customers to hold more than one bank account to mitigate the cash shortages. On the contrary, the use of only one bank can be attributed to the fact that most people prefer having one account because of the general opinion that banks charge exorbitant fees in an already economically challenged environment

Close to 86% (n=229) of the respondents had personal accounts while the remainder was shared equally between respondents with business accounts and those with both, with proportions of 7.5% (n=20) and 6.7% (n=18) respectively. Looking at Table 5.2 above, there were equally low numbers of respondents with business and both type of accounts. This is to be expected as there are more individual bank account holders than corporate accounts. Additionally most corporates make use of services like internet banking to facilitate company transactions, and thus are most unlikely to queue for cash like individual bank account holders.

The responses given by customers regarding the number of years they had been with a particular bank reflect that the majority lay between the second (1-5 years) and the third (6-10 years) category of groupings which accounted for 37.1% and 25.5% respectively. This shows most customers had average length relationships with their banks. A small minority of 4.5% had built strong and lengthy relationships with their banks (of more than 20 years), which may signify lack of trust in the Zimbabwean banking sector. The trust one places in a bank will contribute to his/her behavioural intentions in regard to the continued use of that bank.

5.6 DESCRIPTIVE STATISTICS ON THE ASSESSMENT OF BANKS

The customers were asked to give their personal ratings on a 5-point Likert scale ranging from 1 (strongly disagree) to 5 (strongly agree) on issues relating to the bank performance. The constructs were:

- Competence (ability);
- Integrity (consistency);
- Value alignment;
- Benevolence;
- Communication;
- Structural assurance;
- Deposition of trustworthiness;
- Affective commitment; and
- Behavioural intentions.

The constructs are discussed in the following subsections, they will be discussed using frequencies, proportions, means and standard deviations. The average of each item was calculated and it was used for ranking with the aspect on top being the one with the highest average on all the constructs with more than one item.

5.6.1 Descriptive Statistics on Competence (Ability)

The competence construct was assessed using four scale items as presented in Table 5.3 below:

Table 5.3: The level of agreement on competence issues

The Level of Agreement on Competence Issues							
Statement	**Level of agreement**					**Mean**	**SD**
	Strongly agree	**Agree**	**Neutral**	**Disagree**	**Strongly disagree**		
QB1. My bank is knowledgeable	26.3% (70)	26.3% (70)	17.3% (46)	25.2% (67)	4.9% (13)	3.44	1.26
QB4. My bank has the information it needs to conduct business	25.6% (68)	21.8% (58)	24.4% (65)	22.6% (60)	5.6% (15)	3.39	1.24
QB2. My bank can be relied upon to give honest advice	20.3% (54)	26.3% (70)	13.5% (36)	27.4% (73)	12.4% (33)	3.15	1.35
QB3. My bank is efficient	12.3% (32)	26.2% (68)	6.2% (16)	24.6% (64)	30.8% (80)	2.65	1.45

About 52.6% of the customers that responded to the survey agreed that their banks were knowledgeable with a mean of 3.44$(M = 3.44, SD = 1.26)$. Close to 50% agreed that the bank had the information it needed to conduct business (47.4%) $(M = 3.39, SD = 1.24)$ and that the bank could be relied upon to give honest advice (46.6%)$(M = 3.15, SD = 1.35)$. The issue on efficiency of the bank resulted in 55.4% of the customers disagreeing and the mean was 2.65 $(M = 2.65, SD = 1.45)$. Looking at the means, the analysis above shows that the

customers rated all the items with averages of three indicating that overall, they neither agreed nor disagreed, that is, they were neutral and, in terms of variation, the standard deviations were all close to one. Using the empirical rule, 68.26% of the respondents had ratings between 2 and 4 (±1 standard deviation from the mean). In terms of efficiency, the issue regarding the "*bank is efficient*" was the one with the lowest mean, thus indicating the lowest agreement level for the item on competence.

5.6.2 Descriptive Statistics on Integrity (Consistency)

Six scale items were used to measure customer perceptions on the integrity (consistency) construct. The proportions are presented in Table 5.4 below.

Table 5.4: The level of agreement on integrity (consistency) issues

Statement	Level of agreement					Mean	SD
	Strongly agree	Agree	Neutral	Disagree	Strongly disagree		
QB6. My bank is honest	24.2% (64)	33.6% (89)	23 .0% (61)	13.6% (36)	5.7% (15)	3.57	1.16
QB10. My bank is consistent in what it does	17.5% (46)	33.1% (87)	24 .0% (63)	16.7% (44)	8.7% (23)	3.34	1.20
QB5. My bank shows high integrity	22.2% (59)	31.2% (83)	13.5% (36)	22.2% (59)	10.9% (29)	3.32	1.33
QB7. My bank conducts transactions fairly	19.2% (51)	30.9% (82)	17 .0% (45)	22.6% (60)	10.2% (27)	3.26	1.28
QB9. My bank keeps its word	13 .0% (34)	30.2% (79)	28.6% (75)	18.7% (49)	9.5% (25)	3.18	1.17
QB8. My bank acts in the best interest of the customer	12.1% (32)	25.8% (68)	15.9% (42)	27.7% (73)	18.6% (49)	2.85	1.32

In terms of averages, only the item "*bank is honest*" had respondents agreeing to the issue with an average of 3.57 which is close to four $(M = 3.57, SD = 1.16)$. Among all the other items of integrity and consistency the respondent neither agreed nor disagreed and the item "*acts in the best interest of the customer*" was rated the lowest of the construct with an average of 2.85 $(M = 2.85, SD = 1.32)$. The items "*bank is honest*" $(M = 3.57, SD = 1.16)$, "*bank is consistent*" $(M = 3.34, SD = 1.20)$, "*bank shows high integrity*" $(M = 3.32, SD = 1.33)$ and "*bank conducts transactions fairly*" $(M = 3.26, SD = 1.28)$ had more than 50% of the customers in agreement. The proportions were 57.8%, 50.6%, 53.4% and 51.1% respectively. Thus, customers trust a bank that stick to its operation principles using standard operation procedures. Overall, close to 50%, that is 48.3% of the customers confirmed generally that banks in Zimbabwe show integrity and consistency. In terms of variation all standard

deviations were close to 1. Thus, the item "*bank is honest*" had the majority giving responses that range from 3 to 5.

5.6.3 Descriptive Statistics on Value Alignment

The values which customers align with the services they receive from their banks were measured with four scale items tabulated in Table 5.5.

Table 5.5: The level of agreement on value alignment issues

Statement	Level of agreement					Mean	SD
	Strongly agree	Agree	Neutral	Disagree	Strongly disagree		
QB14. My bank is receptive to my needs	17.1% (45)	39.5% (104)	20.9% (55)	12.5% (33)	9.9% (26)	3.41	1.20
QB11. My bank has the same values as me	8.3% (22)	30.5% (81)	22.6% (60)	22.2% (59)	16.5% (44)	2.92	1.23
QB13. My bank has the same concerns as me	8.8% (23)	26 .0% (68)	26.7% (70)	24.8% (65)	13.7% (36)	2.91	1.19
QB12. My bank does what it takes to make me happy	12.2% (32)	24.3% (64)	15.6% (41)	26.2% (69)	21.7% (57)	2.79	1.35

Of all the items assessed in this construct, overall, none of them had means greater than 3.5. All the means were close to three indicating that the customers neither agreed nor disagreed. Thus, the customers were just neutral. The standard deviations were close to 1 and, using the empirical rule, one can conclude that the majority of the respondents, that is, 68.26%, had ratings from 2 to 4 (±1 standard deviations from the mean). The item "*bank is receptive to my needs*" was rated the least negative item with a mean of 3.41 $(M = 3.41, SD = 1.20)$, while the item "*bank makes me happy*" was rated the most negative item for value alignment with a mean of 2.79 $(M = 2.79, SD = 1.35)$. The items "…*bank makes me happy*" close to 50% of the customers indicating disagreement. It meant that the customers felt that the bank did not make them happy which is to be expected considering the challenges in the banking sector.

5.6.4 Descriptive Statistics on Benevolence

The benevolence construct was evaluated using five scale items shown in Table 5.6 below:

Table 5.6: The level of agreement on benevolence issues

Statement	Level of agreement					Mean	SD
	Strongly agree	Agree	Neutral	Disagree	Strongly disagree		
QB15. My bank Is responsive when contacted	29.4% (78)	43 .0% (114)	14.3% (38)	9.1% (24)	4.2% (11)	3.85	1 .07

Statement	Level of agreement					Mean	SD
	Strongly agree	Agree	Neutral	Disagree	Strongly disagree		
QB16. My bank shows respect for the customers	19.4% (51)	31.2% (82)	16.3% (43)	18.6% (49)	14.4% (38)	3.22	1.35
QB17. My bank treats its customers fairly	16.5% (43)	32.6% (85)	12.3% (32)	23.4% (61)	15.3% (40)	3.11	1.35
QB18. My bank competently handles all my requests	12.5% (33)	31.1% (82)	15.9% (42)	24.2% (64)	16.3% (43)	2.99	1.31
QB19. My bank communicates clearly	9.8% (26)	18.1% (48)	21.1% (56)	34.7% (92)	16.2% (43)	2.71	1.22

Generally, the item "*bank is responsive when contacted*" was rated the only positive item with a mean of 3.85 $(M = 3.85, SD = 1.07)$, which is close to 4 and an agreement proportion of 72.4%. The standard deviation was 1 indicating that the majority of the customers' ratings were between 3 and 5 (±1 standard deviations from the mean). The item "*bank respect customers*" $(M = 3.22, SD = 1.35)$ had 50.6% in agreement with a third in disagreement. The item "*bank treats customers fairly*" had $(M = 3.11, SD = 1.35)$ close to 50% in agreement and close to 40% in disagreement. All the items had standard deviations close to 1. Apart from the item "*bank is responsive when contacted*", all the items had the majority of the customers giving ratings from 2 to 4 (±1 standard deviations from the mean).

5.6.5 Descriptive Statistics on Communication

Table 5.7 shows how respondents evaluated the communication construct using four scale items**.**

Table 5.7: The level of agreement on communication issues

Statement	Level of agreement					Mean	SD
	Strongly agree	Agree	Neutral	Disagree	Strongly disagree		
QB22. My bank acts as I would	5.3% (14)	23.3% (61)	29 .0% (76)	22.9% (60)	19.5% (51)	2.72	1.18
QB21. My bank informs me regularly on new developments	6.8% (18)	22.6% (60)	19.6% (52)	29.8% (79)	21.1% (56)	2.64	1.23
QB20. My bank communicates regularly	8.3% (22)	17.8% (47)	18.2% (48)	36.4% (96)	19.3% (51)	2.59	1.22
QB23. My bank informs me immediately of any problems	7.5% (20)	17.7% (47)	12.4% (33)	30.8% (82)	31.6% (84)	2.39	1.30

The item "*bank informs immediately on problems*" was rated the most negative with an average of 2.39 $(M = 2.39, SD = 1.30)$ and a proportion of 62.4% indicating disagreement. The items "*bank informs regularly on new developments*" $(M = 2.64, SD = 1.23)$ and the item "*bank communicates regularly*" $(M = 2.59, SD = 1.22)$ had disagreement levels of 50.9% and

55.7% respectively. These show that on these issues the customers were negative. The issue "*bank acts as I would*" $(M = 2.72, SD = 1.18)$ had 42.4% in disagreement. All items had means close to 1 indicating that the views of the customers were ranging between 2 to 4 (±1 standard deviations from the mean). Generally, across all banks, banks are short-changing their customers by not communicating with them on immediate problems they face and any new developments. Thus, regular communication is needed to retain customers trust in all banks.

5.6.6 Descriptive Statistics on Structural Assurance

Structural assurance was assessed by four items and the results are presented in Table 5.8.

Table 5.8: The level of agreement on structural assurance issues

The Level of Agreement on Structural Assurance Issues							
Statement	**Level of agreement**					**Mean**	**Std dev**
	Strongly agree	**Agree**	**Neutral**	**Disagree**	**Strongly disagree**		
QB25. I believe my bank complies with the banking legal framework	21 .0% (55)	37 .0% (97)	32.4% (85)	5.7% (15)	3.8% (10)	3.66	1 .00
QB26. I believe my funds are safe in my bank	12.1% (32)	17.4% (46)	22.3% (59)	27.5% (73)	20.8% (55)	2.72	1.30
QB24. I believe my bank is very secure	7.9% (21)	10.6% (28)	22.6% (60)	33.6% (89)	25.3% (67)	2.42	1.20
QB27. I believe the legal framework in the country protects the depositor	4.9% (13)	6 .0% (16)	16.2% (43)	34 .0% (90)	38.9% (103)	2 .04	1.11

Only the item "*bank complies with legal framework*" was rated the only positive item of structural assurance with an average of 3.66 $(M = 3.66, SD = 1\ .00)$ and an agreement level of 58%. Using the empirical rule, the majority of the customers gave views between 3 to 5 (±1 standard deviations from the mean). The item "*legal framework protects the depositor*" was the one rated the most negative with a mean of 2 .04 $(M = 2\ .04, SD = 1.11)$ and a proportion of 72.9% in disagreement. In this case, about 68.26% of the respondents had ratings from 1 to 3 (±1 standard deviations from the mean). It is followed by "*bank is secure*", which has a mean of 2.42 $(M = 2.42, SD = 1.20)$ and a proportion of 58.9% disagreeing. These two were rated the most negative items of structural assurance. The item "my *funds are safe*" $(M = 2.72, SD = 1.30)$ had close to 50% in disagreement. The general feeling among respondents was that they had lost confidence in the regulatory framework in the banking sector such that banks were being used for ease of transaction purposes only and not for savings.

5.6.7 Descriptive Statistics on Deposition of Trustworthiness

Four scale items were used to measure the level of trustworthiness which respondents had in their banks. The results are tabulated in Table 5.9 below.

Table 5.9: The level of agreement on deposition of trustworthiness issues

Statement	Level of agreement					Mean	SD
	Strongly agree	Agree	Neutral	Disagree	Strongly disagree		
QC1. My bank has a reputation for being honest	18.5% (49)	37.7% (100)	19.6% (52)	18.1% (48)	6 .0% (16)	3.45	1.16
QC4. Overall, I feel my bank is trustworthy	17.7% (47)	25.7% (68)	18.9% (50)	27.2% (72)	10.6% (28)	3.13	1.29
QC2. My bank has a reputation for looking after its customers	14.3% (38)	28.7% (76)	12.8% (34)	29.8% (79)	14.3% (38)	2.99	1.32
QC3. My bank has a reputation for being reliable	14.8% (39)	28 .0% (74)	9.8% (26)	34.8% (92)	12.5% (33)	2.98	1.31

All scale items were on the average rated neutral for this construct with averages close to three. The item "*bank has reputation for being honest*" $(M = 3.45, SD = 1.16)$ was rated the most positive item with an agreement level of 56.2%, while items "*bank has reputation for looking after customers*" $(M = 2.99, SD = 1.32)$ and "*bank has reputation for being reliable*" $(M = 2.98, SD = 1.31)$ were equivalently rated the most negative items of deposition of trustworthiness. Their disagreement levels were 44.1% and 49.3% respectively. The item "*overall I feel my bank is trustworthy*" $(M = 3.13, SD = 1.29)$ had a level of agreement of 43.4% and a level of disagreement of 37.8%. Thus, customers trust a bank that is honest and which cares for them. All means were close to 1 and most respondents gave values from 2 to 4.

5.6.8 Descriptive Statistics on Affective Commitment

Table 5.10 below illustrates how respondents assessed the four scale items which measured the construct of affective commitment.

Table 5.10: The level of agreement on affective commitment issues

Statement	Level of agreement					Mean	SD
	Strongly agree	Agree	Neutral	Disagree	Strongly disagree		
QD3. I like to cooperate with the bank staff officers	29.1% (77)	40.4% (107)	14.3% (38)	9.1% (24)	7.2% (19)	3.75	1.18
QD2. I have in myself a sense of belonging to the given bank	22.2% (59)	25.6% (68)	23.7% (63)	20.7% (55)	7.9% (21)	3.33	1.25
QD1. I identify myself with the bank mission and activities	18.9% (50)	29.8% (79)	21.5% (57)	22.6% (60)	7.2% (19)	3.31	1.22

Statement	Level of agreement					Mean	SD
	Strongly agree	Agree	Neutral	Disagree	Strongly disagree		
QD4. I would be very happy to spend the rest of my life banking with my bank	21.1% (56)	19.2% (51)	12 .0% (32)	25.6% (68)	22.2% (59)	2.91	1.48

The item "*I like to cooperate with the bank staff officers*" was rated the only positive item of affective commitment with a mean of 3.75 $(M = 3.75, SD = 1.18)$ and a level of agreement of 69.5%. The item "*I would be very happy to spend the rest of my life banking with my bank*" was rated the most negative with a mean of 2.91 $(M = 2.91, SD = 1.48)$ and a level of disagreement of 47.8%. In as much as respondents would want to cooperate with bank staff, it seems there is lack of an enabling environment with the current banking sector. The items "*I have a sense of belonging to the given bank*" $(M = 3.33, SD = 1.25)$, followed by "*I identify myself with the bank mission and activities*" $(M = 3.31, SD = 1.22)$ had levels of agreement close to 50% which were 47.8% and 47.7%. All standard deviations were close to 1 indicating that the majority of the ratings fell between 2 and 4 (±1 standard deviations from the mean).

5.6.9 Descriptive Statistics on Behavioural Intentions

Four items were used to measure the behavioural intentions of respondents with results presented in the Table 5.11 below:

Table 5.11: The level of agreement on behavioural intentions issues

Statement	Level of agreement					Mean	SD
	Strongly agree	Agree	Neutral	Disagree	Strongly disagree		
QD6. I will try new products and services that are provided by my bank	29.1% (77)	39.6% (105)	16.2% (43)	9.8% (26)	5.3% (14)	3.77	1.13
QD7. I am fully ready to recommend my bank to everybody who might ask	23.1% (61)	25 .0% (66)	19.3% (51)	22 .0% (58)	10.6% (28)	3.28	1.32
QD8. I will say positive things to other people about the services provided by my bank	21.8% (58)	23.3% (62)	25.2% (67)	19.2% (51)	10.5% (28)	3.27	1.29
QD5. I intend to continue using my bank in the future	21.4% (57)	22.2% (59)	9.8% (26)	24.4% (65)	22.2% (59)	2.96	1.49

The item "*I will try new products and services that are provided by my bank*" was perceived the only positive item related to behavioural intentions with a mean of 3.77 $(M = 3.77, SD = 1.13)$ and a level of agreement of 68.7%. The standard deviation of 1.13 shows that about 68.26% had responses from 2.64 to 4.90 (±1 standard deviations from the mean). On the other

end, the item "*I intend to continue using my bank in the future*" was rated the most negative with a mean of 2.96 $(M = 2.96, SD = 1.49)$ and a level of disagreement of 46.6%. Across all constructs, the items "*I am full ready to recommend my bank to everybody who might ask*" $(M = 3.28, SD = 1.32)$ and "*I will say positive things … about the services provided by my bank*" $(M = 3.27, SD = 1.29)$ had levels of agreement of 48.1% and 45.1% respectively. All these items had means close to 1 indicating that the majority of the customers gave ratings from 2 to 4 (±1 standard deviations from the mean).

5.6.10 Descriptive Statistics on Additional Issues Affecting Customers

On the last part of the questionnaire, respondents were requested to give an indication of additional issues that concerns them the most about the banks from which qualitative data was obtained. The patterns in the responses were identified, examined and responses grouped into themes of textual data. These themes were then matched with the trustworthiness dimension under investigation in this study. The table below shows an extract of emerging trends from the clustered responses.

Table 5.12: Additional Issues affecting customers in the banking sector

Concern	Frequency	%	Rank
Inefficiency	49	21.5%	1
Satisfactory services	46	20.2%	2
Liquidity crisis	27	11.8%	3
Insecure	19	8.3%	4
Poor customer relation and retention strategies	19	8.3%	4
Technologically behind	17	7.5%	6
Difficulty transactions	11	4.8%	7
High bank charges	9	3.9%	8
Strong financial and capital base	7	3.1%	9
Improve on communication	7	3.1%	9
Poor branch network	6	2.6%	11
Unfavourable legislative framework	4	1.8%	12
Social responsibility	3	1.3%	13
Dilapidated infrastructure	2	0.9%	14
Employee welfare	2	0.9%	14
	228	**100 .0%**	

From Table 5.12 above, it can be shown that the highest number of respondents were mostly concerned with the efficiency (21.5%), ease of transacting (4.8%) and quality of services (20.2%) provided by the bank which are all aligned to the competency perspective. Other significant themes were that of the liquidity crisis (11.8%), insecurity of depositors' money (8.3%), and unfavourable legislative framework (1.8%), all related to the structural assurance construct.

5.7 INDEPENDENT T-TEST TO DETERMINE DIFFERENCES IN MEAN SCORES ACROSS CATEGORIES SOCIO-DEMOGRAPHIC VARIABLES

The independent t-test was done to determine whether the constructs differed by gender or whether one has more than one account. As mentioned in the methodology, the assumptions of the t-test were satisfied. The observations were randomly selected and were independent from each other and normality was achieved by applying the central limit theorem. The independent t-test was done at the 5% level of significance and the test was significant if the p-value was less than .05. Composite variables were created by finding the average on the following constructs.

- Competence (ability);
- Integrity (consistency);
- Value alignment;
- Benevolence;
- Communication;
- Structural assurance;
- Deposition of trustworthiness
- Affective commitment; and
- Behavioural intentions.

A test was highly significant if the p-value was less than .01. The independent t-test are presented in the next subsections.

5.7.1 Independent T-test to Determine Difference in Mean Scores by Gender

The Levene's test of homogeneity of variance was used to tests for the assumption of equal variance across groups. The test showed that all p-values were greater than .05 except on the construct "*communication*" where the p-values were .016. In this case, statistics under equal variance not assumed were discussed. The independent t-test resulted in difference in means on communication and structural assurance with p-values of .006 and .018 respectively as shown in Table 5.13.

Table 5.13: Independent t-tests to determine difference in mean score by gender

Group Statistics					Levene's Test for Equality of Variances		T-test for Equality of Means		
Indicator	**Gender**	**N**	**Mean**	**SD**	**F**	**Sig**	**Equal Variances**	**t-value**	**Sig (2 –tailed p-score)**
Competency (ability)	Male	185	3.217	1.234	.148	.700	Assumed	1 .039	.300
	Female	80	3 .044	1.278			Not	1 .024	.307
Integrity (consistency)	Male	186	3.294	1.120	.014	.907	Assumed	.863	.389
	Female	80	3.164	1.137			Not	.858	.393
Value alignment	Male	186	3 .067	1.101	.778	.379	Assumed	1.262	.208
	Female	79	2.878	1.157			Not	1.238	.218
Benevolence	Male	186	3.249	1 .095	.405	.525	Assumed	1.641	.102
	Female	79	3 .011	1 .044			Not	1.673	.096
Communication	Male	186	2.704	1.140	5.891	.016	Assumed	2.598	.010
	Female	79	2.324	.963			Not	2.781	.006
Structural assurance	Male	186	2.803	.987	2.146	.144	Assumed	2.372	.018
	Female	79	2.498	.884			Not	2.480	.014
Deposition of trustworthiness	Male	186	3.200	1.175	.152	.697	Assumed	1.331	.184
	Female	79	2.987	1.228			Not	1.308	.193
Affective commitment	Male	185	3.386	1.187	.058	.810	Assumed	1.249	.213
	Female	80	3.188	1.192			Not	1.247	.214
Behavioural intentions	Male	185	3.393	1.232	.247	.619	Assumed	1.496	.136
	Female	80	3.148	1.203			Not	1.510	.133

There was no difference in mean scores on competence (ability), integrity and consistency, value alignment, benevolence, deposition of trustworthiness, affective commitment and behavioural intentions. All the p-values were greater than .05. The constructs were interpreted in a similar way by both men and women and gender cannot be a determinant in distinguishing the issues. However, the constructs communication and structural assurance were interpreted differently by men and women.

In terms of communication, the p-value was .006 leading to the difference in means. The effect size was .03, which was of a small effect as proposed by Cohen (1988). The mean score and standard deviation for men were (M= $2.70, SD = 1.14$) while for women they were (M= $2.32, SD = .96$). The confidence interval error bars are shown in Figure 5.1 below:

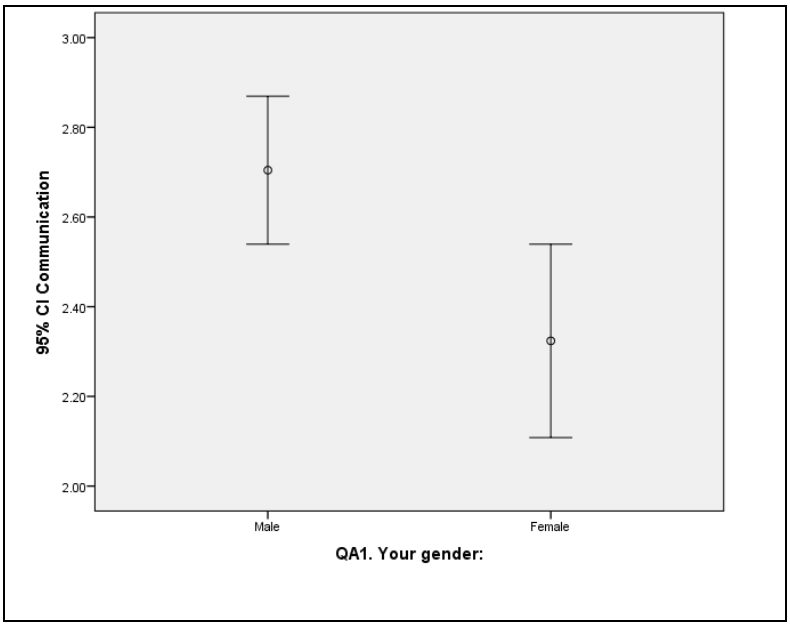

Figure 5.1: Confidence interval error bars for communication by gender

The confidence interval error bars are not overlapping showing that there is a difference in means. Looking at the means, the men had a mean closer to 3 while the women had a mean close to 2. Thus, the men had a significantly higher mean $(M = 2.70, SD = 1.14)$ than the women $(M = 2.32, SD = .96)$. In this case, the women were in disagreement on issues on communication as evidenced by the mean.

Structural assurance had a p-value of .018, which is less than .05. This means that the means were significantly different from each other. A small effect size of .02 was obtained indicating that the means were significantly different. The means and standard deviations for men and women were (M= $2.80, SD = .99$) and (M= $2.50, SD.88$) respectively. The confidence interval error bars are shown in Figure 5.2.

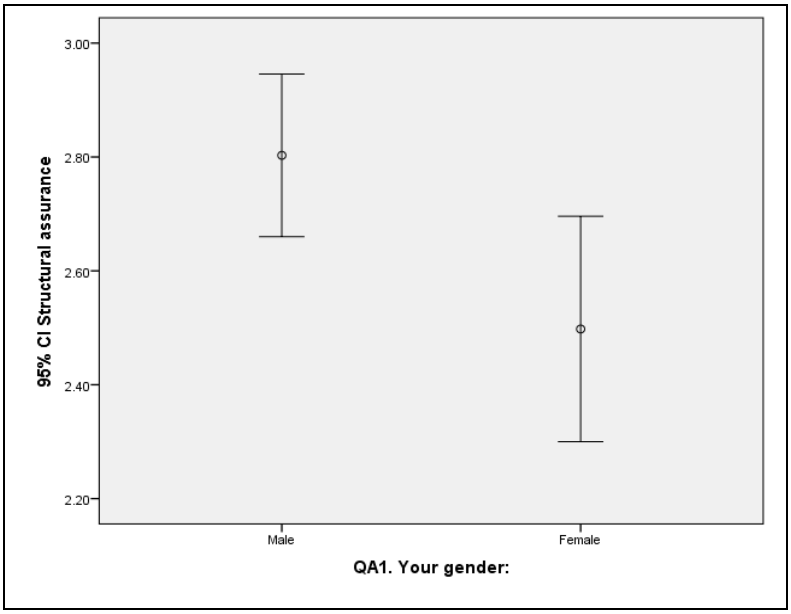

Figure 5.2: Confidence interval error bars for structural assurance by gender

There was not much overlap between the confidence intervals, supporting the differences in means. Women had a lower mean than men suggesting that there were more in disagreement on issues on structural assurance.

5.7.2 Independent T-test to Determine Difference in Mean Scores by Whether One has More Than One Bank Account

The respondents were asked whether they had more than one account. The response was a yes or no. The Levene's test on homogeneity of variance showed that the constructs integrity and consistency, communication and deposition of trustworthiness had p-values less than .05 indicating differences in variances across groups. The statistics under equal variances not assumed were discussed for these constructs. Looking at Table 5.14 on the test of equality of means, all p-values were more than .05 and thus there was no difference in mean scores.

Table 5.14: Independent t-tests to determine difference in mean score by whether one has more than one bank account

Group Statistics					Levene's Test for Equality of Variances		T-test for Equality of Means		
Indicator	**More than one account**	**N**	**Mean**	**SD**	**F**	**Sig**	**Equal Variances**	**t-value**	**Sig (2 – tailed p-score)**
Competency (ability)	Yes	92	3.197	1.295	.652	.420	Assumed	.287	.774
	No	173	3.150	1.221			Not	.282	.778
Integrity (consistency)	Yes	92	3.189	1.238	6.122	.014	Assumed	-.676	.500
	No	174	3.287	1 .065			Not	-.645	.520
Value alignment	Yes	91	3 .017	1.203	1.505	.221	Assumed	.084	.933
	No	174	3 .005	1 .078			Not	.081	.936
Benevolence	Yes	91	3.308	1.113	.039	.844	Assumed	1.409	.160
	No	174	3.111	1 .064			Not	1.390	.166
Communication	Yes	91	2.739	1.239	8.436	.004	Assumed	1.662	.098
	No	174	2.502	1 .025			Not	1.567	.119
Structural assurance	Yes	91	2.843	1 .059	3.442	.065	Assumed	1.618	.107
	No	174	2.642	.910			Not	1.543	.125
Deposition of trustworthiness	Yes	91	3.181	1.296	4.987	.026	Assumed	.439	.661
	No	174	3.114	1.139			Not	.421	.674
Affective commitment	Yes	92	3.397	1.216	.386	.535	Assumed	.717	.474
	No	174	3.287	1.174			Not	.709	.479
Behavioural intentions	Yes	92	3.408	1.215	.186	.667	Assumed	.853	.395
	No	174	3.273	1.230			Not	.856	.393

All the constructs, competence (ability), integrity and consistency, value alignment, benevolence, communication, structural assurance, deposition of trustworthiness, affective commitment and behavioural intentions showed that there was no difference in means. The dimensions were interpreted in a similar way by whether one has more than one account or not. Thus, having an account or more than one account is not a determinant in distinguishing the ratings of the customers.

5.8 ANOVA TESTS TO DETERMINE DIFFERENCES IN MEAN SCORES ACROSS CATEGORIES OF SOCIO-DEMOGRAPHIC VARIABLES

ANOVA was done to determine mean differences across categories with more than two categories. The ANOVA was done to determine whether the constructs differed by age, highest formal qualification, bank, type of account and banking period. The test was done at the 5% level of significance. As mentioned in the methodology chapter, in the case where the assumption of equality of variance across group was violated, the Welch robust test of equality of means was used to determine whether the means indeed differed and Games-Howell test was used as a post-hoc test. In the case where the assumption was not violated, the F-test was used and the Tukey-B post-hoc analysis was used to determine where the differences exist. The means were different if the p-value was less than .05 and if it was less than .01 it was highly significant. A non-significant p-value meant that there was homogeneity in rating of the constructs among customers with regard to the socio-demographic variable. The tests are presented in the next subsections.

5.8.1 ANOVA Test to Determine Differences in Mean Scores by Age

Age had five groups which were under 25 years, 26 – 35 years, 36 – 45 years, 46 – 55 years and over 55 years. The construct on competency (ability) was the one where the assumption of equality of variance was violated. The p-value was .002 and in this case the Welch robust test for equality of variance was used. Looking at Table 5.15, the means were different on the constructs of competence (ability), integrity and consistency, value alignment, deposition of trustworthiness, affective commitment and behavioural intentions.

Table 5.15: ANOVA tests for difference of mean scores by age

		Sum of squares	**Df**	**Mean square**	**F**	**Sig.**	**Effect size, η^2**
Competence (Ability)	Between Groups	21.605	4	5.401	3.609	.007	.05
	Within Groups	389.075	260	1.496			
	Total	**410.680**	**264**				

		Sum of squares	Df	Mean square	F	Sig.	Effect size, η^2
Integrity (consistency)	Between Groups	17.692	4	4.423	3.637	.007	.05
	Within Groups	317.381	261	1.216			
	Total	**335.073**	**265**				
Value alignment	Between Groups	12.060	4	3 .015	2.459	.046	.04
	Within Groups	318.743	260	1.226			
	Total	**330.803**	**264**				
Benevolence	Between Groups	8.934	4	2.233	1.929	.106	
	Within Groups	301.003	260	1.158			
	Total	**309.937**	**264**				
Communication	Between Groups	7.203	4	1.801	1.493	.205	
	Within Groups	313.671	260	1.206			
	Total	**320.874**	**264**				
Structural assurance	Between Groups	4.533	4	1.133	1.219	.303	
	Within Groups	241.645	260	.929			
	Total	**246.179**	**264**				
Deposition of trustworthiness	Between Groups	23.892	4	5.973	4.415	.002	.06
	Within Groups	351.712	260	1.353			
	Total	**375.604**	**264**				
Affective commitment	Between Groups	18.257	4	4.564	3.340	.011	.05
	Within Groups	355.305	260	1.367			
	Total	**373.563**	**264**				
Behavioural intentions	Between Groups	16.490	4	4.123	2.816	.026	.04
	Within Groups	380.662	260	1.464			
	Total	**397.153**	**264**				

There was no difference in mean scores by age group for benevolence, communication, and structural assurance since all p-values were greater than .05. The rating of these constructs is independent of age. However, the rating of the constructs for competence (ability), integrity and consistency, value alignment, deposition of trustworthiness, affective commitment and behavioural intentions are affected by age. The Welch robust test of equality of means in Table 5.16 confirmed that there was difference in mean scores according to age group for the construct competency (ability).

Table 5.16: Robust tests of equality of means for competence (ability) by age

	Statistic	df1	df2	Sig.	Effect size, ω^2
Welch	4.253	4	84.984	.003	.05
Brown-Forsythe	3.714	4	177.300	.006	

Thus, the results of the ANOVA tests are in agreement with the Welch test and it can be concluded that the views on competency (ability) are affected by the age group of the customers. The construct competency (ability) resulted in the Welch robust test having a p-value of .003 which is highly significant. Thus, views differed by age group on the ratings on competency (ability). A small effect size of .05 was obtained and thus 5% of the variance among the scores can be attributed to the age groups. The Games-Howell post-hoc test was used to determine where the differences are and it resulted in two homogeneous groups as shown in Table 5.17 below.

Table 5.17: Games-Howell homogeneous group for competence (ability) by age

QA2. Your age group:	N	Subset for alpha = 0 .05	
		1	2
Under 25 years	26	2.4712	
26 - 35 years	92	3.0471	3.0471
36 - 45 years	71		3.2477
Over 55 years	23	3.3587	3.3587
46 - 55 years	53		3.5142

The major difference was between the pairs under 25 years and 46 – 55 years and under 25 years and 36 – 45 years. The mean for those under 25 years was 2.47 $(M = 2.47, SD = 1.03)$ indicating that there were in disagreement. The mean for those aged 36 – 45 years was 3.25 $(M = 3.25, SD = 1.36)$ indicating that they were neutral while the mean for those aged 46 – 55 years was $(M = 3.51, SD = 1.25)$ indicating that they agreed. The confidence interval error bars in Figure 5.3 show that the pairs mentioned do not overlap suggesting that they are different.

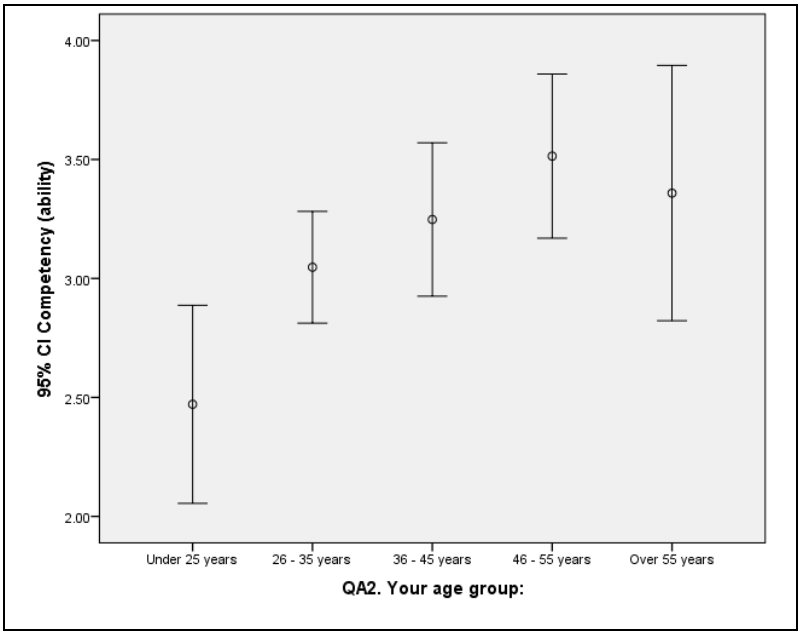

Figure 5.3: Confidence interval error bars for competence (ability) by age

Those aged 46 – 55 years had a significantly higher mean indicating that they agreed while those under 25 years had a lower mean indicating that they disagreed. Looking at the confidence interval error bars, it can be concluded that the level of agreement tends to be associated with age groups. The older the person gets the more they tend to agree with competency (ability).

The ANOVA tests for integrity and consistency had an F-value of 4.423 with a p-value of .007 and the means were significantly different from each other. A small effect size of .05, and thus 5% of the variability in integrity and consistency was accounted for by the change in age groups. The Tukey-B post-hoc analysis resulted in two homogeneous groups as shown in Table 5.18 below.

Table 5.18: Tukey-B homogeneous group for integrity and consistency by age

Tukey B[a,b]			
		Subset for alpha = 0 .05	
QA2. Your age group:	N	1	2
Under 25 years	26	2.6974	
26 - 35 years	93	3.1025	3.1025
Over 55 years	23		3.3565
36 - 45 years	71		3.3662
46 - 55 years	53		3.6006

The younger age group from under 25 years and 26 – 35 years were not significantly different from each other. The major difference was between those aged under 25 years and those aged 36 years and above. The confidence interval error bars are shown in Figure 5.4.

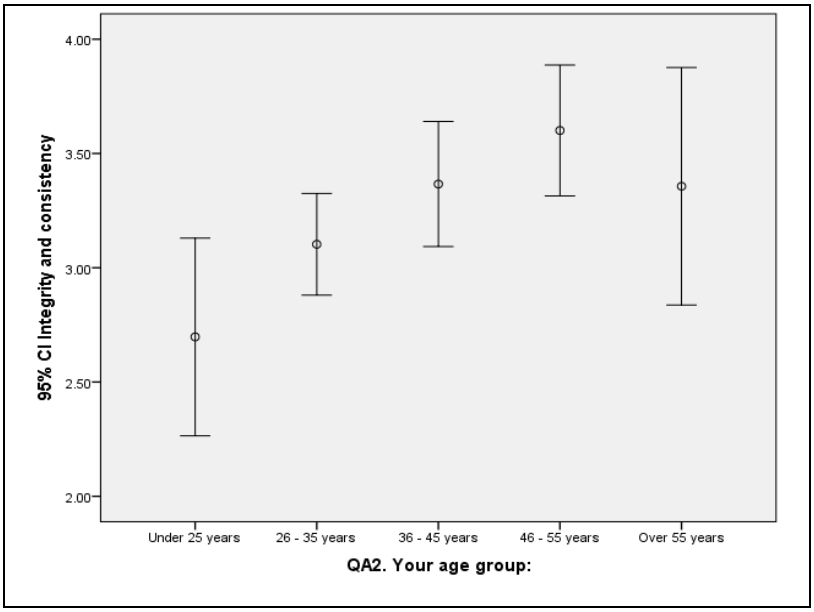

Figure 5.4: Confidence interval error bars for integrity and consistency by age

Looking at the confidence interval error bars, the level of agreement on integrity and consistency tend to increase as one gets older and in this case the older groups tend to agree more than the younger age groups as evidenced by high means.

The construct on value alignment resulted in a p-value of .046 leading to the conclusion of mean differences across age groups. A small effect size of .04 was obtained and 4% of the variability in value alignment was accounted for by the change in age groups. The Tukey-B post-hoc analysis test resulted in two homogeneous groups as shown in Table 5.19.

Table 5.19: Tukey-B homogeneous groups for value alignment by age

Tukey B[a,b]			
		Subset for alpha = 0 .05	
QA2. Your age group:	**N**	**1**	**2**
Under 25 years	26	2.5577	
26 - 35 years	92	2.8995	2.8995
36 - 45 years	71	3.0446	3.0446
Over 55 years	23	3.1522	3.1522
46 - 55 years	53		3.3192

The major difference was between those aged under 25 years with a mean of 2.56 $(M = 2.56, SD = 1.03)$ and those aged 46 – 55 years with a mean of 3.32 $(M = 3.32, SD = 1.09)$. The confidence interval error bars in Figure 5. 5 show that they do not overlap.

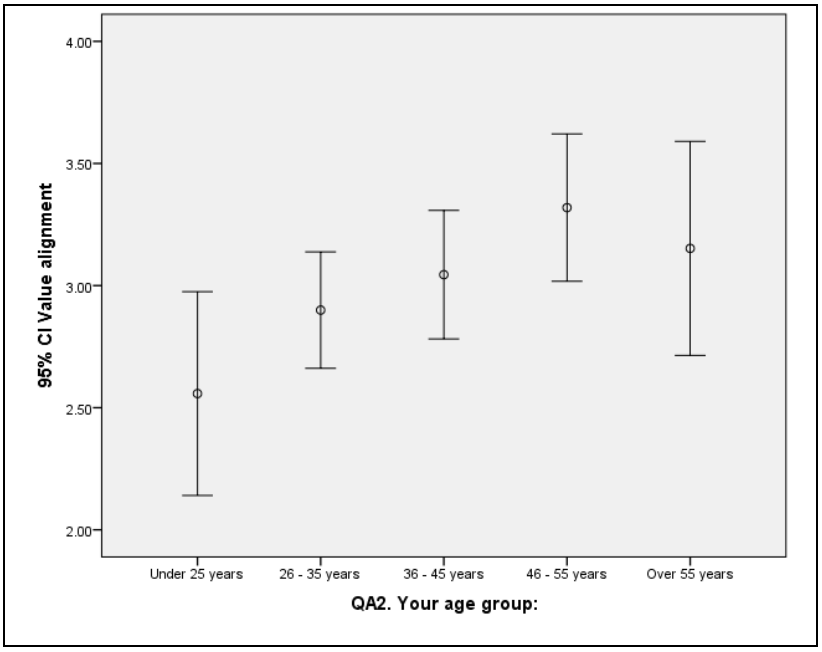

Figure 5.5: Confidence interval error bars for value alignment by age

All means are close to 3 indicating that they were neutral on issues on value alignment. However, the same pattern was obtained as one gets older, they tend to agree with the issues on value alignment. Those older are more in agreement than those who are younger.

The test of equality of means for deposition of trustworthiness resulted in an F-value of 4.415 with a p-value of .002. It was highly significant. The views on deposition of trustworthiness differed by age groups. A moderate effect size of .06 was obtained and 6% of the variability in deposition of trustworthiness was accounted for by the change in age groups. The Tukey-B had two homogeneous groups as shown in the Table 5.20 below.

Table 5.20: Tukey-B homogeneous groups for deposition of trustworthiness by age

Tukey B[a,b]			
		Subset for alpha = 0 .05	
QA2. Your age group:	N	1	2
Under 25 years	26	2.5192	
26 - 35 years	92	2.9212	2.9212
Over 55 years	23		3.2935
36 - 45 years	71		3.3310
46 - 55 years	53		3.4858

The age group under 25 years was significantly different from those aged over 35 years. All means were close to three as shown in Figure 5.6.

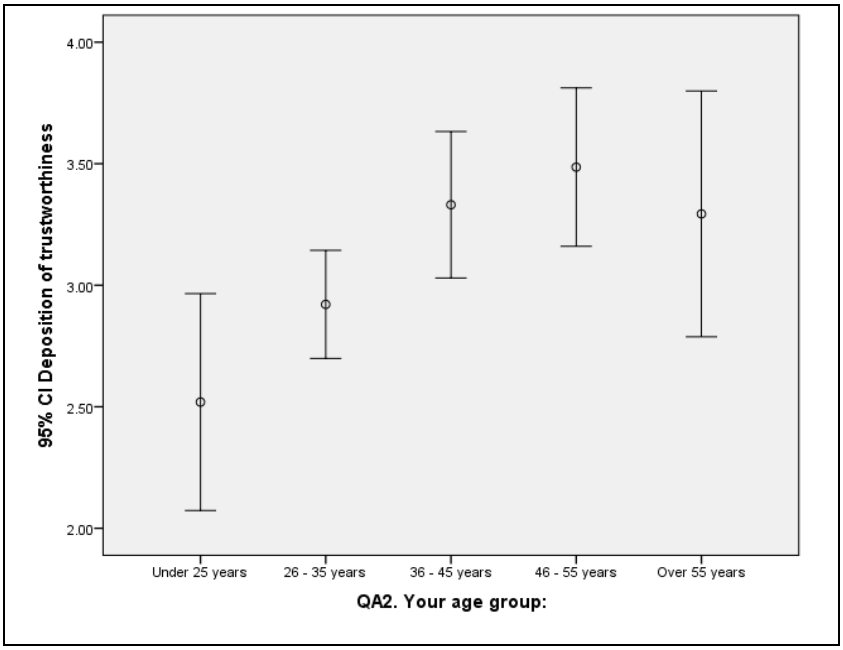

Figure 5.6: Confidence interval error bars for deposition for trustworthiness by age

Looking at the error bars in Figure 5.6, the older age groups have significantly higher means than the younger age groups. This shows that the older customers tend to agree more on issues on deposition of trustworthiness.

In terms of the construct, affective commitment the ANOVA tests had an F-value of 3.340 with a p-value of .011. The means scores differed by age. A small effect size of .05 was obtained and 5% of the variability in affective commitment was accounted for by the change in age groups. The Tukey-B post-hoc analysis test resulted in two homogeneous groups as shown in Table 5.21.

Table 5.21: Tukey-B homogeneous groups for affective commitment by age

Tukey B[a,b]			
		Subset for alpha = 0 .05	
QA2. Your age group:	**N**	**1**	**2**
Under 25 years	25	2.8033	
26 - 35 years	93	3.1425	3.1425
Over 55 years	23	3.4239	3.4239
36 - 45 years	71	3.4472	3.4472
46 - 55 years	53		3.6903

Those under 25 years had a mean of 2.80 $(M = 2.80, SD = 1.17)$ indicating that they neither agreed nor disagreed while those aged between 46 – 55 years had a mean of 3.69 $(M = 3.69, SD = 1.09)$ indicating that they agreed. Those under 25 years were significantly different from those between 46 – 55 years and the confidence interval error bars do not overlap as shown in Figure 5.7.

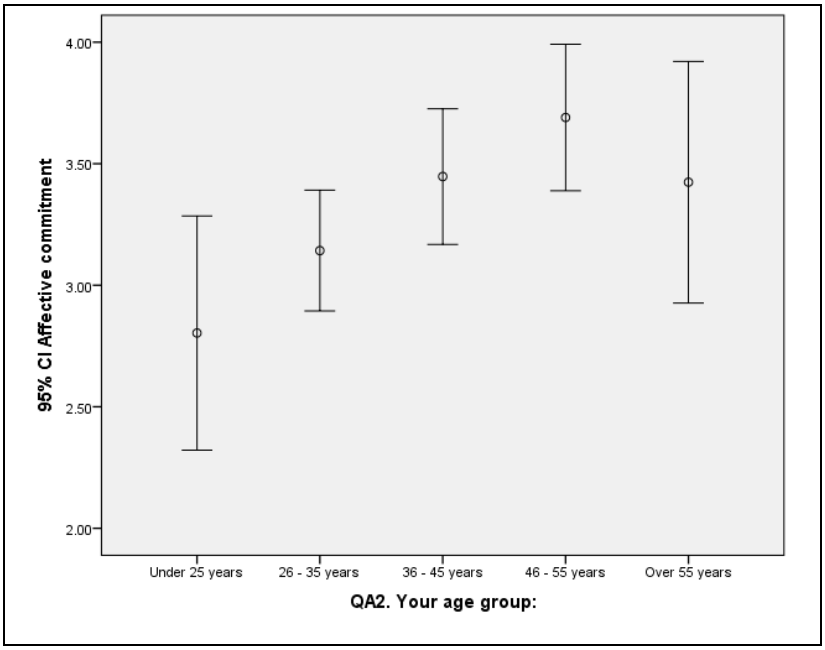

Figure 5.7: Confidence interval error bars for affective commitment by age

Those aged under 25 years were neutral while those aged 46 – 55 years tend to agree on issues on affective commitment. The older customers tend to be more committed to their banks than the younger ones.

The ANOVA test for behavioural intentions means resulted in an F-value of 2.816 with a p-value of .026. There was difference in views by age group. An effect size of .04 or was obtained and 4% of the variability in behavioural intentions was accounted for by the change in age groups. The Tukey-B test resulted in two homogeneous groups as shown in Table 5.22.

Table 5.22: Tukey-B homogeneous group for behavioural intentions by age

Tukey B[a,b]		**Subset for alpha = 0 .05**	
QA2. Your age group:	**N**	**1**	**2**
Under 25 years	25	2.8400	
26 - 35 years	93	3.1344	3.1344
36 - 45 years	71	3.4296	3.4296
Over 55 years	23	3.4457	3.4457
46 - 55 years	53		3.6651

Those under 25 years had the lowest mean of 2.84 $(M = 2.84, SD = 1.08)$ indicating that there were neutral while those aged 46 – 55 years had the highest mean of 3.67 $(M = 3.67, SD = 1.19)$ indicating that they agreed. The two groups differ significantly and this is supported by the non-overlapping of the error bars in Figure 5.8.

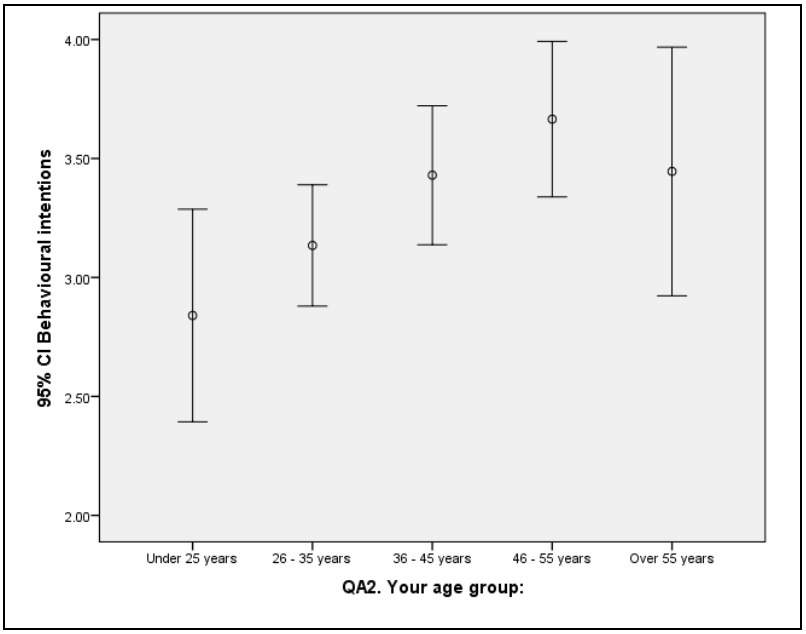

Figure 5.8: Confidence interval error bars for behavioural intentions by age

Those older tend to agree more on issues of behavioural intentions than those younger.

5.8.2 ANOVA Test to Determine Differences in Mean Scores by Highest Formal Qualification

The highest formal qualification was divided into five categories which were diploma, bachelors, masters, doctorate and other. All constructs had equal variance across groups except the constructs affective commitment and behavioural intentions. The ANOVA test results are shown in Table 5.23.

Table 5.23: ANOVA tests for difference of mean scores by highest formal qualification

		Sum of squares	Df	Mean square	F	Sig.	Effect size, η^2
Competence (ability)	Between Groups	13.518	4	3.380	2.212	.068	
	Within Groups	397.161	260	1.528			
	Total	**410.680**	**264**				
Integrity (consistency)	Between Groups	5.550	4	1.387	1 .099	.358	
	Within Groups	329.523	261	1.263			
	Total	**335.073**	**265**				
Value alignment	Between Groups	5.350	4	1.337	1 .068	.373	
	Within Groups	325.453	260	1.252			
	Total	**330.803**	**264**				
Benevolence	Between Groups	6.515	4	1.629	1.396	.236	
	Within Groups	303.422	260	1.167			
	Total	**309.937**	**264**				

		Sum of squares	Df	Mean square	F	Sig.	Effect size, η^2
Communication	Between Groups	7 .043	4	1.761	1.459	.215	
	Within Groups	313.830	260	1.207			
	Total	**320.874**	**264**				
Structural assurance	Between Groups	7.642	4	1.911	2 .082	.083	
	Within Groups	238.537	260	.917			
	Total	**246.179**	**264**				
Deposition of trustworthiness	Between Groups	12.997	4	3.249	2.330	.057	
	Within Groups	362.607	260	1.395			
	Total	**375.604**	**264**				
Affective commitment	Between Groups	11.330	4	2.833	2 .033	.090	
	Within Groups	362.232	260	1.393			
	Total	**373.563**	**264**				
Behavioural intentions	Between Groups	16.466	4	4.116	2.811	.026	.04
	Within Groups	380.687	260	1.464			
	Total	**397.153**	**264**				

There was no difference in the constructs competence (ability), integrity and consistency, value alignment, benevolence, communication, structural assurance, deposition of trustworthiness and affective commitment. Highest formal qualification had an impact on the views on behavioural intentions as supported by a p-value of .026.

Since the variance for behavioural intentions were not the same across groups, the Welch robust test was used and it resulted in a p-value of less than .001. Thus, the views of customers were different on behavioural intentions due to their highest formal qualifications as shown in Table 5.24 below:

Table 5.24: Robust tests of equality of means for behavioural intentions by highest formal qualification

	Statistic[a]	df1	df2	Sig.	Effect size, ω^2
Welch	7.509	4	61.064	.000	.09
Brown-Forsythe	3.346	4	209.236	.011	

The effect size was .09, and 9% of the variability in behavioural intentions was accounted for by difference in formal qualification. Since the variances were not equal, the Games-Howell post-hoc test resulted in two homogeneous groups as shown in Table 5.25.

Table 5.25: Games-Howell homogeneous group for behavioural intentions by highest formal qualification

	QA3. Your highest formal qualification	N	Subset for alpha = 0.05	
			1	2
Games-Howell	Other	74	3.1408	
	Diploma	47	3.2447	
	Bachelors	94	3.2846	
	Masters	40	3.5458	
	Doctorate	10		4.4000

Those with doctorates had a mean of 4.4 $(M = 4.40, SD = .63)$ indicating that they agreed. They were significantly different from the other groups as evidenced by non-overlapping of the confidence interval error bars in Figure 5. 9.

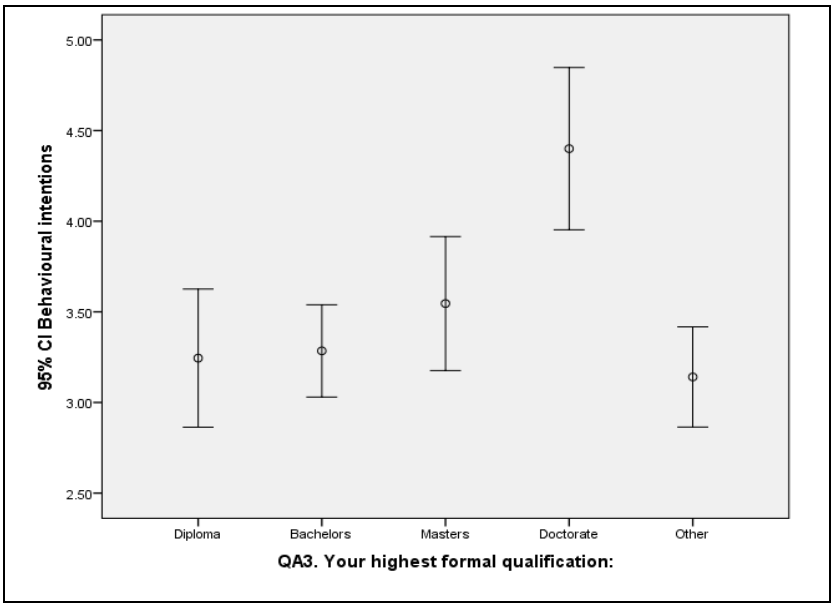

Figure 5.9: Confidence interval error bars for behavioural intentions by highest formal qualification

Those with doctorates tended to agree more with issues on behavioural intentions than the other formal qualifications which include those with diplomas, bachelors, masters and other.

5.8.3 ANOVA Test to Determine Differences in Mean Scores by Bank

Four banks participated in the study, these are Bank A, Bank B, Bank C and Bank D. The Levene's test of homogeneity of variances showed that all constructs were different in variability except the constructs communication and structural assurance. The ANOVA test of equality of means showed that all constructs had mean scores that differed by where one banks. The results are shown in Table 5.26 below.

Table 5.26: ANOVA Tests for Difference of Mean Scores by Bank

		Sum of squares	Df	Mean square	F	Sig.
Competence (Ability)	Between Groups	70.414	3	23.471	18.004	p<.001
	Within Groups	340.265	261	1.304		
	Total	410.680	264			
Integrity (Consistency)	Between Groups	42.252	3	14.084	12.602	p<.001
	Within Groups	292.821	262	1.118		
	Total	335.073	265			
Value alignment	Between Groups	44.630	3	14.877	13.568	p<.001
	Within Groups	286.173	261	1.096		
	Total	330.803	264			
Benevolence	Between Groups	42.877	3	14.292	13.968	p<.001
	Within Groups	267 .060	261	1.023		
	Total	309.937	264			
Communication	Between **Groups**	23 .085	3	7.695	6.744	p<.001
	Within Groups	297.788	261	1.141		
	Total	**320.874**	**264**			
Structural assurance	Between Groups	18.088	3	6.029	6.899	p<.001
	Within Groups	228.091	261	.874		
	Total	246.179	264			
Deposition of trustworthiness	Between Groups	71.023	3	23.674	20.287	p< .001
	Within Groups	304.581	261	1.167		
	Total	375.604	264			
Affective commitment	Between Groups	75.482	3	25.161	22.031	p<.001
	Within Groups	298.081	261	1.142		
	Total	373.563	264			
Behavioural intentions	Between Groups	84.818	3	28.273	23.626	p<.001
	Within Groups	312.335	261	1.197		
	Total	397.153	264			

Bank had an influence on the views of the customer on banking information. The Welch test robust test of equality of means was used to test whether means differ for all construct with unequal variances across groups. The tests are shown in Table 5.27 below.

Table 5.27: Robust tests of equality of means by bank

Robust Tests of Equality of Means by Bank						
		Statistic[a]	df1	df2	Sig.	Effect size, ω^2
Competency (ability)	Welch	21.309	3	144.994	p<.001	.19
	Brown-Forsythe	18.192	3	256.680	p<.001	
Integrity (consistency)	Welch	17.517	3	145.193	p<.001	.16
	Brown-Forsythe	12.850	3	244.900	p<.001	
Value alignment	Welch	17.567	3	144.699	p<.001	.16
	Brown-Forsythe	13.748	3	251.713	p<.001	
Benevolence	Welch	19.149	3	144.104	p<.001	.17
	Brown-Forsythe	14.157	3	246.173	p<.001	
Communication	Welch	7.975	3	144.900	p<.001	.07
	Brown-Forsythe	6.814	3	257.841	p<.001	
Structural assurance	Welch	7.833	3	144.673	p<.001	.06
	Brown-Forsythe	6.953	3	256.424	p<.001	
Deposition of trustworthiness	Welch	26.527	3	144.690	p<.001	.22
	Brown-Forsythe	20.564	3	250.662	p<.001	
Affective commitment	Welch	30.548	3	144.443	p<.001	.25
	Brown-Forsythe	22.322	3	250.520	p<.001	
Behavioural intentions	Welch	31.249	3	144.793	p<.001	.26
	Brown-Forsythe	23.937	3	252.426	p<.001	

All constructs with unequal variances had means that were significantly different from each other.

Table 5.28: Games-Howell homogeneous of study constructs by bank

Construct		QA4. Which bank do you bank with?	N	Subset for alpha = 0 .05	
				1	2
Competence(Ability)	Games-Howell	Bank C	64	2.7956	
		Bank A	69	2.8998	
		Bank B	69	2.9336	
		Bank D	63		4.0833
Integrity (Consistency)	Games-Howell	Bank C	64	2.9948	
		Bank A	70	3.0500	
		Bank B	69	3.0507	
		Bank D	63		3.9688
Value Alignment	Games-Howell	Bank C	63	2.6587	
		Bank A	69	2.8043	
		Bank B	70	2.8821	
		Bank D	63		3.7315
Benevolence	Games-Howell	Bank C	63	2.7167	
		Bank A	69	3.0333	
		Bank B	70	3.1383	
		Bank D	63		3.8437
Communication	Games-Howell	Bank C	63	2.1772	
		Bank A	69	2.5121	

Construct		QA4. Which bank do you bank with?	N	Subset for alpha = 0 .05	
				1	2
		Bank B	70	2.6548	2.6548
		Bank D	63		3.0198
Structural Assurance	Games-Howell	Bank C	63	2.3214	
		Bank A	69	2.6824	2.6824
		Bank B	70		2.7679
		Bank D	63		3 .0728
Deposition of Trustworthiness	Games-Howell	Bank C	63	2.7103	
		Bank B	70	2.9000	
		Bank A	69	2.9312	
		Bank D	63		4 .0516
Affective Commitment	Games-Howell	Bank C	63	2.8724	
		Bank B	70	3.0845	
		Bank A	69	3.1304	
		Bank D	63		4.2659
Behavioural Intentions	Games-Howell	Bank C	63	2.7773	
		Bank B	70	3.0399	
		Bank A	69	3.2101	
		Bank D	63		4.2937

Competence (Ability)

The construct competence (ability) resulted in the Welch robust test for equality of means having a p-value less than .001 indicating that it was highly significant. A large effect size of .19 was obtained. Thus, 19% of the variability in competence (ability) was being explained by bank used. Since the variances were unequal, the Games-Howell post-hoc test resulted in two homogeneous groups as shown in Table 5.28 above. Those who banked with Bank D had the highest mean of 4.08 $(M = 4\ .08, SD = 1\ .02)$, which is close to four while the other banks had means close to three. Those who banked with Bank D agreed on the issues of competence (ability), while those who banked with the other banks neither agreed nor disagreed as their means were close to 3. This implies that the other customers, apart from Bank D customers were not sure whether their banks were knowledgeable, reliable and efficient, or had the information required to conduct business.

Integrity (Consistency)

In terms of integrity and consistency, the Welch test resulted in a p-value less than .001 resulting in the means being significantly different from each other. An effect size of 16 was obtained and about 16% of the variability in integrity and consistency is being accounted for by the bank used. Since the assumption of equality of variances was violated, the Games-Howell test was used and resulted in two homogeneous groups as shown in Table 5.28 above.

Those who bank with Bank C had the lowest mean of 2.99 $(M = 2.99, SD = .89)$ while those who bank with Bank D had the highest mean of 3.97$(M = 3.97, SD = .84)$. This implies that those who banked with Bank D had agreed that their bank had integrity, was honest, and was transparent and consistent. The other customers were not sure about the integrity and competency of their banks.

Value Alignment

In terms of the construct "*value alignment*", the Welch robust tests of equality of means resulted in highly significant test with a p-value of less than .001. The ratings of the customers on the value alignment differed by banks. A large effect size of.16 was obtained and 16% of the variability in value alignment was being attributed by bank used by customer. The Games-Howell test resulted in two homogeneous groups as shown in Table 5.28 above. As previously observed, Bank D had the highest mean of 3.73 $(M = 3.73, SD = .87)$, while Bank C had the lowest mean of 2.66$(M = 2.66, SD = .98)$. Those who banked with Bank D agreed that the bank valued them, had their best interest at heart, made them happy and was receptive to their needs. The customers from Bank C, Bank A and Bank B neither agreed nor disagreed. Thus, they were not sure on the value alignment issues.

Benevolence

The test of equality of means was significant on the construct benevolence since the Welch test gave a p-value of .001. Thus, the mean scores were significantly different from each other. The effect size was .17, and thus 17% of the variability in benevolence is accounted for by the bank used. The Games-Howell post-hoc test was used to determine which groups differ and two homogeneous groups were obtained as shown in Table 5.28 above. Bank C had the lowest rating of 2.72 $(M = 2.72, SD = .99)$ while Bank D had the highest mean rating of 3.84$(M = 3.84, SD = .77)$. The major difference was between Bank D and the other banks. Those in Bank D had a mean close to 4 indicating that they agreed that their bank was responsive when contacted, showed respect to customers, treated customers fairly, handled their requests fairly and communicated clearly. Customers of the other banks were not sure as they neither agreed nor disagreed.

Communication

The ANOVA test for communication resulted in an F-value of 7.695 with a p-value less than .005. The effect size was .07, which was of a moderate effect. About 7% of the variability in communication is being explained by bank used. Since the variances across groups were equal, the Tukey-B post-hoc test was used to determine which means differed. The test

resulted in two homogeneous groups as shown in Table 5.28 above. Those who banked with Bank C had the lowest mean of 2.18 $(M = 2.18, SD = 1.01)$, while those who banked with Bank D had the highest of mean of 3 .02 $(M = 3.02, SD = .94)$. The pairs that differed were Bank C with Bank D and Bank A with Bank D. Those who banked with Bank C disagreed on issues of communication. They felt that the bank did not communicate regularly; did not inform them of new developments; did not act as they would expect and did not inform them immediately of any problems. The other customers were neutral on the issue. This implies that the communication channels of the banks are not up to standard.

Structural Assurance

In terms of structural assurance, the ANOVA tests resulted in an F-value of 6.899 with a p-value of less than .001 leading to the means being significantly different. A moderate effect size of .06 was obtained and 6% of the variability in the rating of structural assurance issues was attributed to the bank used. Since the Levene's test of homogeneity of variance was not violated, the Tukey-B post-hoc analysis test was used to determine which banks differed. It showed two homogeneous groups as shown in Table 5.28 above. Bank C had the lowest mean of 2.33 $(M = 2.33, SD = .91)$ while Bank D had the highest mean of 3 .07$(M = 3.07, SD = .83)$. The difference was that Bank C differed significantly from Bank B and Bank D. Those who banked with Bank C disagreed on issues of structural assurance. Thus, those with Bank C did not believe their bank was secure and it did not comply with banking regulations; they felt that their funds were not safe and that the legal framework did not protect the depositor. The customers from the other banks were not sure as they neither agreed nor disagreed on structural assurance issues.

Deposition of Trustworthiness

The Welch robust test for equality of means for the construct deposition of trustworthiness resulted in a p-value less than .001. A large effect size of .22 was obtained and about 22% of the variability in deposition of trustworthiness is being accounted for by the bank. The Games-Howell post-hoc test resulted in two homogeneous groups as shown in Table 5.28 above. Those who used Bank C had the lowest rating of 2.71 $(M = 2.71, SD = 1.01)$, while those who used Bank D had the highest mean of 4 .05$(M = 4.05, SD = .89)$. Those who banked with Bank D agreed that their bank was honest, had a reputation for customer care, and was reliable and trustworthy. Those who banked with Bank C, Bank B and Bank A neither agreed nor disagreed. They were not sure.

Affective Communication

The construct 'affective communication' had a p-value of less than .001 indicating that the means across banks were different. The effect size was .25, and about 25% of the variability in affective communication was accounted for by the bank used. Since the variances were not equal, the Welch robust test of equality of means was used to determine which banks differed. The Games-Howell post-hoc test resulted in two homogeneous groups as shown in Table 5.28 above. The major difference was between Bank D and the other banks. The other banks had means close to 3; that is, they were neutral, while customers from Bank D had ratings close to 4 $(M = 4.27, SD = .83)$ indicating that they agreed. Thus, those who used Bank D agreed that they were emotionally attached to their bank while the customers from the other banks were neutral since they neither agreed nor disagreed.

Behavioural Intentions

The issue on behavioural intentions resulted in a p-value of less than .001 for the test of equality of means. The ratings on behavioural intentions differed by banks. The effect size was .26 and about 26% of the variability in behavioural intentions was accounted for by the bank used. The Games-Howell post-hoc test resulted in the same pattern showing two homogeneous groups as shown in Table 5.28 above. The same pattern as in the other constructs was observed. Bank C had the lowest mean of 2.78 $(M = 2.78, SD = 1.02)$, while Bank D had the highest mean of 4.29$(M = 4.29, SD = .89)$. Bank C was significantly different from the other banks. Those who banked with Bank D agreed that they had good intentions with their bank while those from Bank C, Bank A and Bank B were neutral.

It is evident from the analysis above that Bank D customers trusted their bank, were committed to it and exhibited positive behavioural intentions towards their bank compared to customers from the other three banks. Bank C was rated the lowest in terms of bank trustworthiness, affective commitment and behavioural intentions.

5.8.4 ANOVA Test to Determine Differences in Mean Scores by Type of Account

The customers were asked the type of account(s) they had with the bank. The categories were personal accounts, business accounts or both. The Levene test of homogeneity of variances resulted in all tests having p-values less than .05 except the constructs benevolence, communication and structural assurance. The ANOVA tests resulted in the constructs competence (ability), structural assurance, deposition of trustworthiness, affective commitment and behavioural intentions having p-values less than .05 indicating that the means were significantly different from each other. The results are shown in Table 5.29.

Table 5.29: ANOVA tests for difference of mean scores by type of account

		Sum of squares	Df	Mean square	F	Sig.	Effect size, η^2
Competence (ability)	Between Groups	10.481	2	5.240	3.443	.033	.03
	Within Groups	398.776	262	1.522			
	Total	**409.257**	**264**				
Integrity (consistency)	Between Groups	5.498	2	2.749	2.187	.114	
	Within Groups	330.537	263	1.257			
	Total	**336 .035**	**265**				
Value alignment	Between Groups	4.894	2	2.447	1.964	.142	
	Within Groups	326.471	262	1.246			
	Total	**331.365**	**264**				
Benevolence	Between Groups	6.791	2	3.395	2.936	.055	
	Within Groups	303.020	262	1.157			
	Total	**309.811**	**264**				
Communication	Between Groups	4 .043	2	2 .022	1.660	.192	
	Within Groups	319.179	262	1.218			
	Total	**323.222**	**264**				
Structural assurance	Between Groups	5.955	2	2.977	3.242	.041	.02
	Within Groups	240.642	262	.918			
	Total	**246.597**	**264**				
Deposition of trustworthiness	Between Groups	11.644	2	5.822	4.191	.016	.03
	Within Groups	363.960	262	1.389			
	Total	**375.604**	**264**				
Affective commitment	Between Groups	9.925	2	4.962	3.588	.029	.03
	Within Groups	363.744	263	1.383			
	Total	**373.668**	**265**				
Behavioural intentions	Between Groups	10.034	2	5.017	3.408	.035	.03
	Within Groups	387.152	263	1.472			
	Total	**397.186**	**265**				

There was no difference in mean scores by type of account for integrity and consistency, value alignment, benevolence and communication since all p-values were greater than .05. The rating of these constructs is independent of type of account. The type of account impacted on the ratings on competence (ability), structural assurance, deposition of trustworthiness, affective commitment and behavioural intentions are affected by age. Structural assurance resulted in unequal variances across all constructs, and the Welch robust test of equality of means is shown in Table 5.30.

Table 5.30: Robust tests of equality of means for structural assurance by type of account

	Statistic[a]	df1	df2	Sig.	Effect size, ω^2
Welch	4.495	2	30.020	.020	.03
Brown-Forsythe	4.981	2	34.847	.013	

The same results as the ANOVA tests were obtained confirming that the mean scores differ by type of account.

The ANOVA tests for the construct competence (ability) had an F-value of 3.443 with a p-value of .033. The means were significantly different across categories of type of accounts. A small effect size of .03 was obtained, and only 3% of the variability in competence (ability) was accounted for by type of account. However, the Tukey-B post-hoc test resulted in only one homogeneous group as shown in Table 5.31.

Table 5.31: Tukey-B homogeneous group for competency (ability) by type of account

Tukey B[a,b]		
QA6. Please state if your account is a personal account or a business account.		**Subset for alpha = 0 .05**
	N	**1**
Personal account	228	3.1111
Business account	19	3.1316
Both personal and business	18	3.9028

Those with personal accounts had the lowest mean indicating that they were neutral while those with both personal and business accounts had a mean of 3.90($M = 3.90, SD = 1.26$) indicating that they agreed. There was not much overlap in confidence interval error bars between those with personal accounts and those with both accounts as shown in Figure 5.10 below.

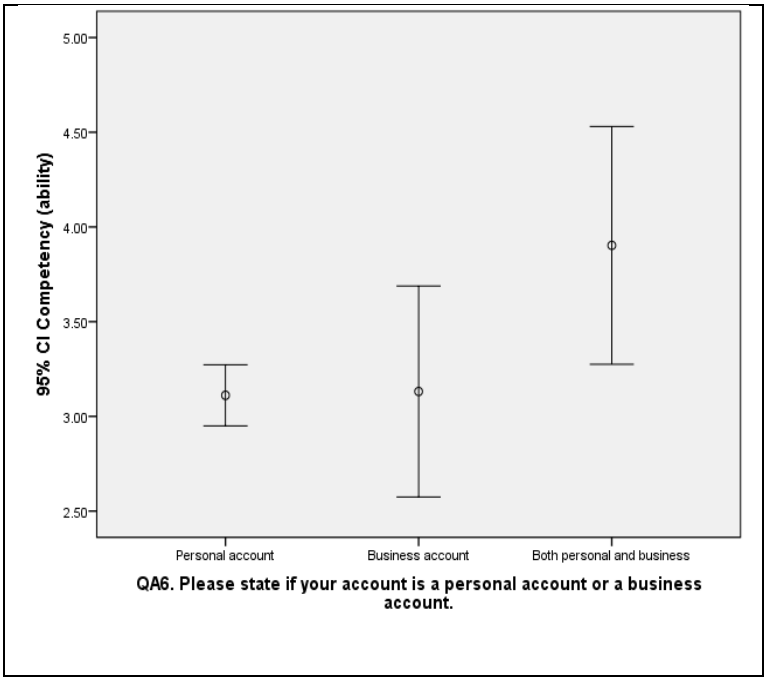

Figure 5.10: Confidence interval error bars for competence (ability) by type of account

Those with both personal and business accounts agreed on issues of competence (ability) of the bank than the other accounts. This might be attributed to the fact that they have more than one bank account which might help them to mitigate issue like cash shortages as they can withdraw cash from two accounts unlike customers with only one bank account.

The construct on structural assurance had unequal variances across categories of type of accounts, and the Welch test gave a p-value of .020 leading to the conclusion that the means were significantly different from each other. A small effect size of .03 was obtained, and only 3% of the variability in competence (ability) was explained by type of account. The Games-Howell post-hoc analysis resulted in two homogeneous groups as shown in Table 5.32.

Table 5.32: Games-Howell homogeneous group for structural assurance by type of account

Games-Howell			
QA6. Please state if your account is a personal account or a business account.		**Subset for alpha = 0 .05**	
	N	**1**	**2**
Business account	20	2.4750	
Personal account	228	2.6923	2.6923
Both personal and business	17		3.2402

Those with business accounts had the lowest mean of 2.48 $(M = 2.48, SD = .57)$, while those with both personal and business accounts had the highest mean of 3.24 $(M = 3.24, SD = .90)$. The main difference was between those with only business accounts and those with both

accounts. This is shown by non-overlapping of the confidence interval error bars in Figure 5.11 below.

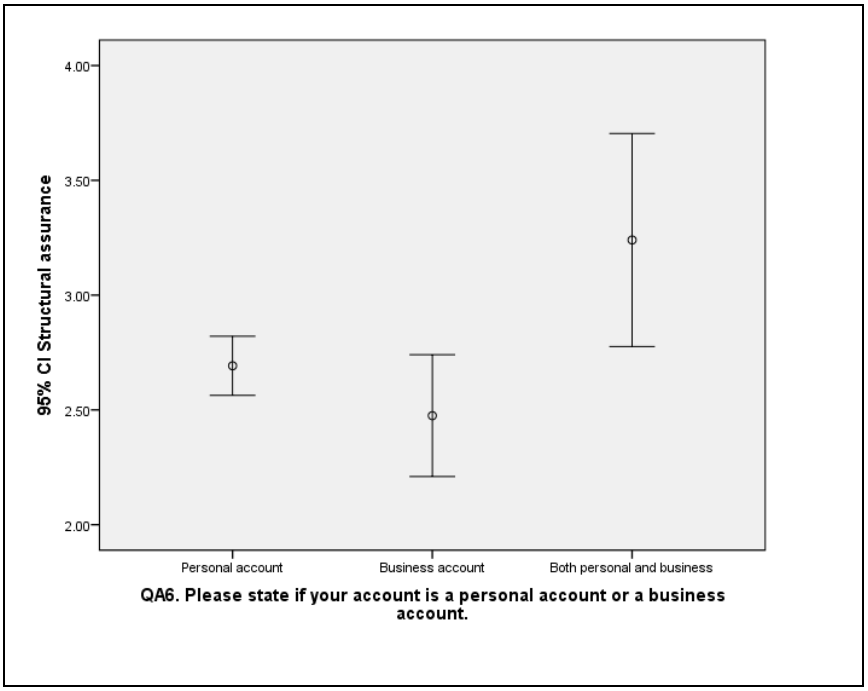

Figure 5.11: Confidence interval error bars for structural assurance by type of account

Those with business account disagreed with issues on structural assurance. Those with both accounts tend to neither agree nor disagree.

The ANOVA test gave an F-value of 4.191 with a p-value of .016 for the construct deposition of trustworthiness. There was a small effect size of .03, and only 3% of the variability in deposition of trustworthiness was explained for by type of account. The Tukey-B post-hoc test had two homogeneous groups as shown in Table 5.33.

Table 5.33: Tukey-B homogeneous group for deposition of trustworthiness by type of account

Tukey B[a,b]			
QA6. Please state if your account is a personal account or a business account.	**N**	**Subset for alpha = 0 .05**	
		1	**2**
Business account	20	2.9000	
Personal account	228	3 .0998	
Both personal and business	17		3.9118

Those with both types of accounts were in their own homogenous group and had a mean of 3.91. Those with business account and personal accounts had means of 2.9 and 3.10 respectively. They were neutral on the issues. Those who held both accounts were significantly different from those who held either a business or personal account only. The confidence interval error bars are presented in Figure 5.12.

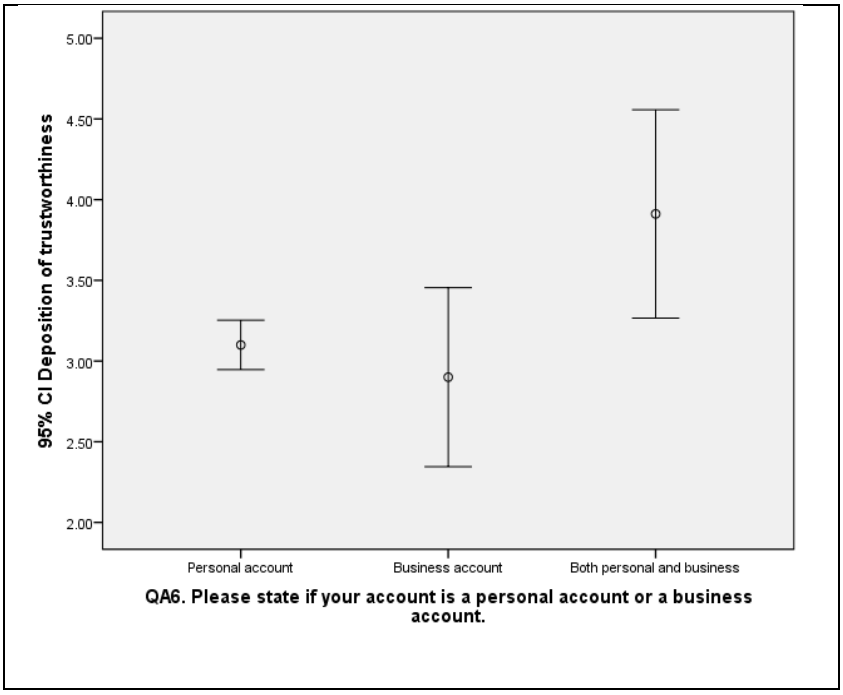

Figure 5.12: Confidence interval error bars for deposition for trustworthiness by type of account.

Those with both types of accounts agreed on issues on deposition of trustworthiness. Thus, they tended to rate the bank as honest, reliable and trustworthy with a good reputation. The other account holders neither agreed nor disagreed; they were not sure.

The construct on affective commitment resulted in an F-value of 3.588 with a p-value of .029 of the variability in affective commitment is accounted for by type of account. The post-hoc test resulted in two homogeneous groups as shown in Table 5.34

Table 5.34: Tukey-B homogeneous groups for affective commitment by type of account

Tukey B[a,b]			
QA6. Please state if your account is a personal account or a business account	**N**	**Subset for alpha = 0 .05**	
		1	**2**
Business account	20	2.9625	
Personal account	228	3.3067	3.3067
Both personal and business	18		3.9583

The business account holders had the lowest mean of 2.96 $(M = 2.96, SD = 1.10)$ indicating neutrality, while those with both accounts had a mean 3.96 $(M = 3.96, SD = 1.14)$ indicating that they agreed. As can be seen in Table 5.34, those with both types of accounts did not belong to the same group with those with business accounts. The confidence interval error bars do not overlap.

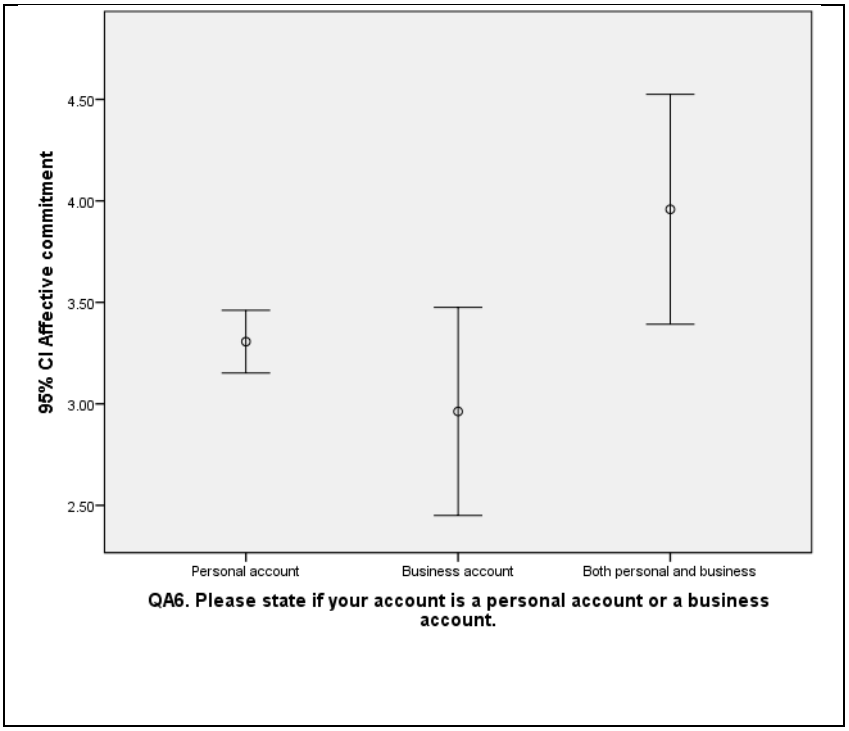

Figure 5.13: Confidence interval error bars for affective commitment by type of account

Looking at the error bar in Figure 5.13, those with both types of accounts are in agreement with issues on affective commitment. They tend to be committed to the bank.

The construct behavioural intentions had an F-value of 3.408 with a p-value of .035. The mean scores were significantly different from each other. A small effect size of .03 was obtained, and 3% of the variability in type of account was explained by type of accounts. The post-hoc test showed that business account holders were significantly different from those with both types of accounts as shown in Table 5.35.

Table 5.35: Tukey-B homogeneous groups for behavioural intentions by type of account

Tukey B[a,b]			
QA6. Please state if your account is a personal account or a business account.		**Subset for alpha = 0 .05**	
	N	**1**	**2**
Business account	20	3.0125	
Personal account	228	3.2939	3.2939
Both personal and business	18		3.9861

The business account holders had the lowest mean of 3 .01$(M = 3\ .01, SD = 1.13)$ and those with both accounts had a mean score of 3.99 $(M = 3.99, SD = 1\ .09)$. The confidence interval error bars are presented in Figure 5.14.

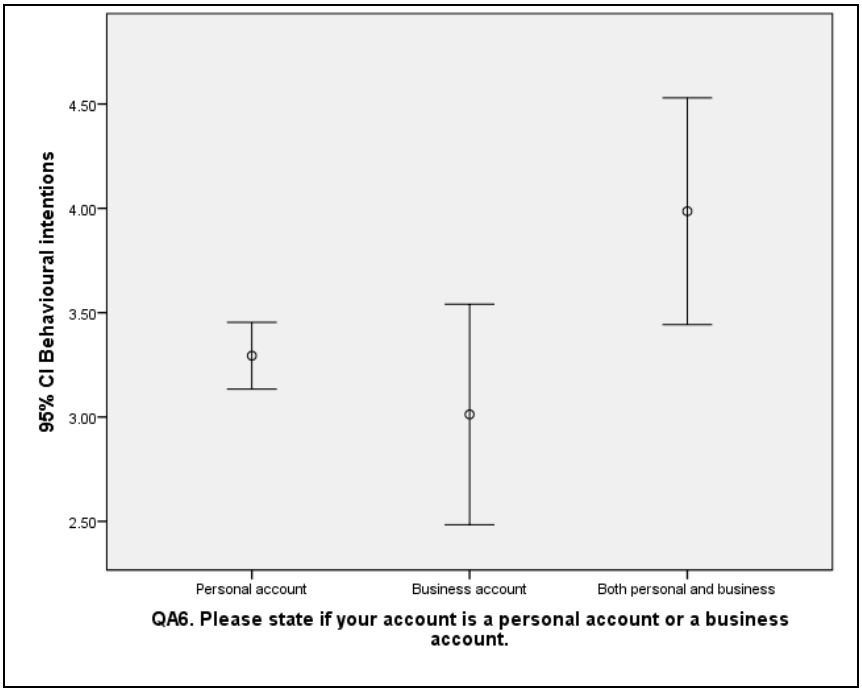

Figure 5.14: Confidence interval error bars for behavioural intentions by type of account

Those with both accounts agreed with issues on behaviour intentions with the bank. They have good intentions with the bank and tend to continue with the bank.

5.8.5 ANOVA Test to Determine Differences in Mean Scores by Banking Period

The respondents were asked how long they had been banking with the bank. The banking period was classified into six categories which are less than 1 year, 1 – 5 years, 6 – 10 years, 11 – 15 years, 16 – 20 years and over 20 years. The test of homogeneity of variance resulted on all constructs having equal variances. The ANOVA test resulted in all constructs having p-values more than .05 and concluding that the means were equal. The results are shown in Table 5.36.

Table 5.36: ANOVA tests for difference of mean scores by banking period

		Sum of squares	Df	Mean square	F	Sig.	Effect size, η^2
Competence (Ability)	Between Groups	11.509	5	2.302	1.499	.191	
	Within Groups	397.748	259	1.536			
	Total	**409.257**	**264**				
Integrity (consistency)	Between Groups	7.406	5	1.481	1.172	.323	
	Within Groups	328.629	260	1.264			
	Total	**336 .035**	**265**				
Value alignment	Between Groups	9.870	5	1.974	1.590	.163	
	Within Groups	321.496	259	1.241			

		Sum of squares	Df	Mean square	F	Sig.	Effect size, η^2
	Total	**331.365**	**264**				
Benevolence	Between Groups	9 .080	5	1.816	1.564	.171	
	Within Groups	300.731	259	1.161			
	Total	**309.811**	**264**				
Communication	Between Groups	9.251	5	1.850	1.526	.182	
	Within Groups	313.971	259	1.212			
	Total	**323.222**	**264**				
Structural assurance	Between Groups	6 .057	5	1.211	1.304	.262	
	Within Groups	240.540	259	.929			
	Total	**246.597**	**264**				
Deposition of trustworthiness	Between Groups	13.644	5	2.729	1.953	.086	
	Within Groups	361.960	259	1.398			
	Total	**375.604**	**264**				
Affective commitment	Between Groups	14.142	5	2.828	2 .045	.073	
	Within Groups	359.526	260	1.383			
	Total	**373.668**	**265**				
Behavioural intentions	Between Groups	13.585	5	2.717	1.842	.105	
	Within Groups	383.601	260	1.475			
	Total	**397.186**	**265**				

There was no difference in the constructs competence (ability), integrity and consistency, value alignment, benevolence, communication, structural assurance, deposition of trustworthiness, affective commitment and behavioural intentions. The banking period had no impact on the assessment of the bank by customers.

5.9 STRUCTURE EQUATION MODELING (SEM)

Structural equation modelling (SEM) was applied to the data to test the model in Figure 5.15 by determining the relationships between the constructs.

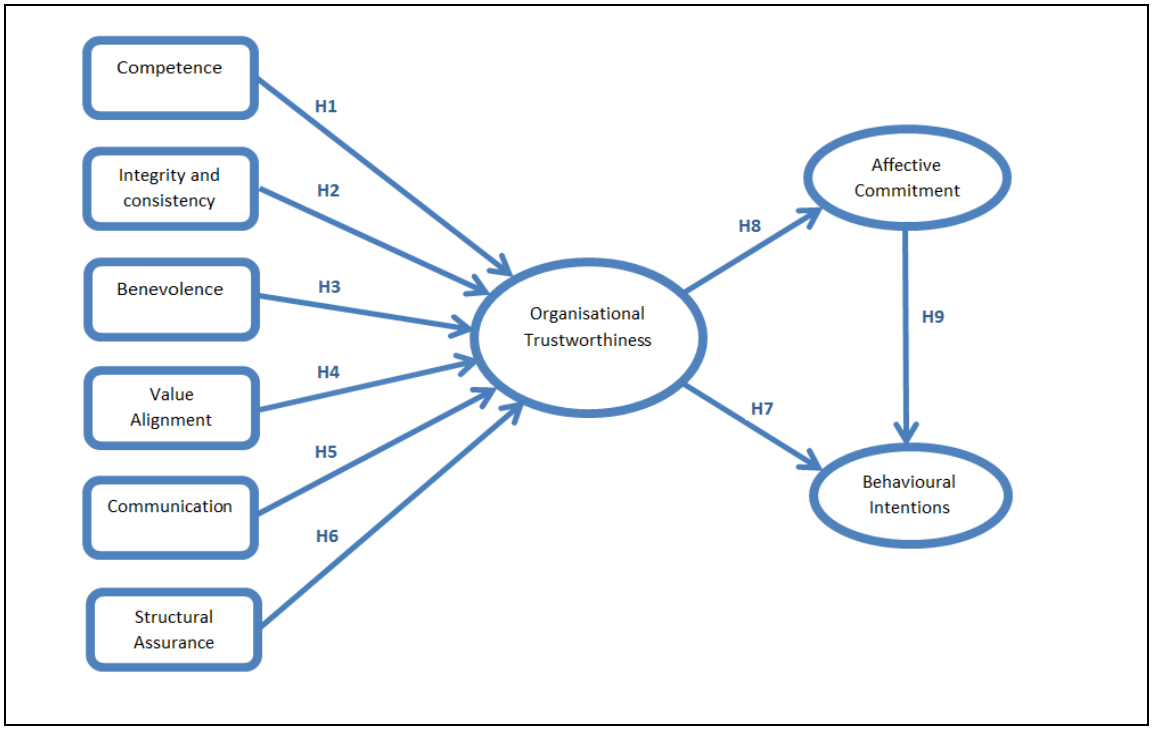

Figure 5.15: The study conceptual framework

There are several methods that can be used to estimate SEM, the most common being the maximum likelihood estimate (MLE). The MLE is a "flexible approach to parameter estimation in which the 'most likely' parameter values to achieve the best model fit are found" (Hair, Black, Babin and Anderson, 2014:575). It is very reliable when all the assumptions are met. The SEM was done using SPSS AMOS version 24.

As mentioned in the methodology chapter, the SEM consists of two parts, the measurement model and the structural model. The measurement model is tested using confirmatory factor analysis. The results of the confirmatory analysis and SEM are presented in the following sections.

5.9.1 Measurement Model (Confirmatory Factor Analysis (CFA))

According to Hair, Black, Babin and Anderson (2014), confirmatory factor analysis is an approach to factor analysis, typically associated with structural equation modelling, that assesses the extent to which a pre-defined structure fits the data. The confirmatory factor analysis was done on the constructs:

- Competence (ability);
- Integrity (consistency);
- Value alignment;
- Benevolence;

- Communication;
- Structural assurance;
- Deposition of trustworthiness;
- Affective commitment; and
- Behavioural intentions.

Confirmatory factor analysis (CFA) enables us to test how well the measured variables represent a set of theoretical latent constructs and it offers the key advantage of analytically testing the precise, conceptually grounded theory explaining how different measured variables represent important psychological, sociological, or business constructs (Hair et al., 2014). The confirmatory factor analysis allows the researcher to test for construct validity of the model using convergent and discriminant validity.

Firstly, the assessment of the model is presented first, followed by convergent validity and then discriminant validity. In this study, the cut-off point chosen for significant factor loading is .70. The fitness of the model is assessed by a number of measures which are:

- Chi-square test – non-significant chi-square with p-values more than .05;
- CFI – greater than .9;
- RMSEA – less than .08;
- TLI (Tucker Lewis Index) – greater than .9;
- GFI – greater than .9;
- Many more like IFI, NFI, AGFI – all greater than .9;
- Cmin/df – the ratio should be less than 5.

The chi-square statistics and the RMSEA are fit indices while incremental fit indices are IFI, TLI, NFI, and CFI, RNI and parsimonious indices are AGFI.

For the chi-square tests, the model fits the data if the *p-value* is more than .05, that is, the model is non-significant but however it is adversely affected by sample size (Hair, Black, Babin & Anderson, 2014). Thus, the need to look at other goodness of fit test. According to Pallant (2013), there is a need, therefore, to perform further and more robust tests to complement the chi-square. According to the same author, at least three goodness of fit indices should depict a good fit to the model. Hair *et al*. (2014) recommend use of one incremental index, one absolute index in addition to the chi-square value and its associated degrees of freedom. The value of CMIN/DF, that is, the minimum discrepancy was 1.832 which is between 1 and 3 and thus it meets the requirements (Hair *et al,* 2014; Paswan 2009; Schumacker and Lomax,

2004). They further advise using three to four fit indices to provide evidence of model fit. According to Tabachnick and Fidell (2014), the most reported indices are the CFI and RMSEA.

5.9.1.1 Confirmatory factor analysis of the competence (ability) components

The competence construct had the following items:

- QB1 - my bank is knowledgeable;
- QB2 - my bank can be relied upon to give honest advice;
- QB3 – my bank is efficient; and
- QB4 – my bank has the information it needs to conduct business

A confirmatory factor analysis was done to the construct, and all the loadings were more than.9 as shown in Figure 5.16. The results showed that the model is a good fit.

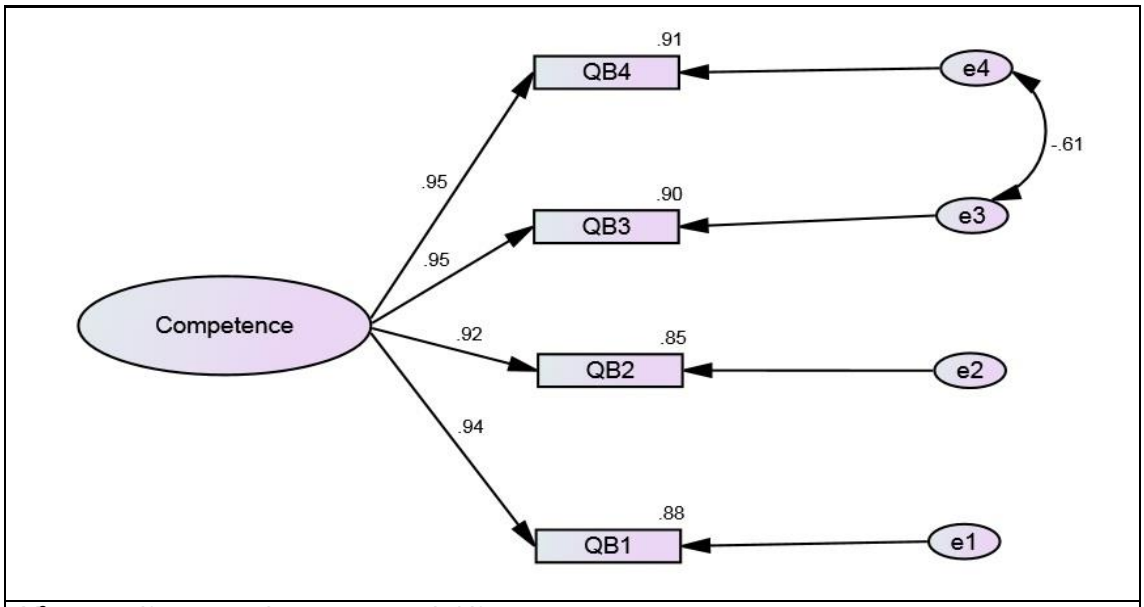

X^2=.269, df = 1; p-value =.604; Cmin/df =.269; CFI =1 .000; GFI=.999, NFI=1, RMSEA= .000

Figure 5.16 Confirmatory factor analysis of the competence (ability) components

The factor loadings are at least .7. The aspects QB1 (my bank is efficient) and QB4 (my bank has the information it needs to conduct business) were the ones with the highest actor loadings and contributing the most to the construct. It means competence was being measured by the efficiency and information needed to do business. The regression weights gave significant critical ratios, all of them with values above 24 and p-values of less than .001. Thus, the above items were retained to be used in the SEM.

5.9.1.2 Confirmatory factor analysis of the integrity (consistency) components

The integrity and consistency dimension was measured by six items which are:

- QB5 - my bank shows high integrity;
- QB6 - my bank is honest;
- QB7 – my bank conducts transactions fairly;
- QB8 – my bank acts in the best interest of the customer;
- QB9 - my bank keeps its word; and
- QB10 - my bank is consistent in what it does.

A confirmatory factor analysis resulted in all the factor loadings being more than .8. According to Hair *et al.* (2014), standardised loading estimates should be .5 or higher, and ideally .7 or higher. Figure 5.17 shows the fit indices provided by the CFA output. The results showed that the model is significant to the data.

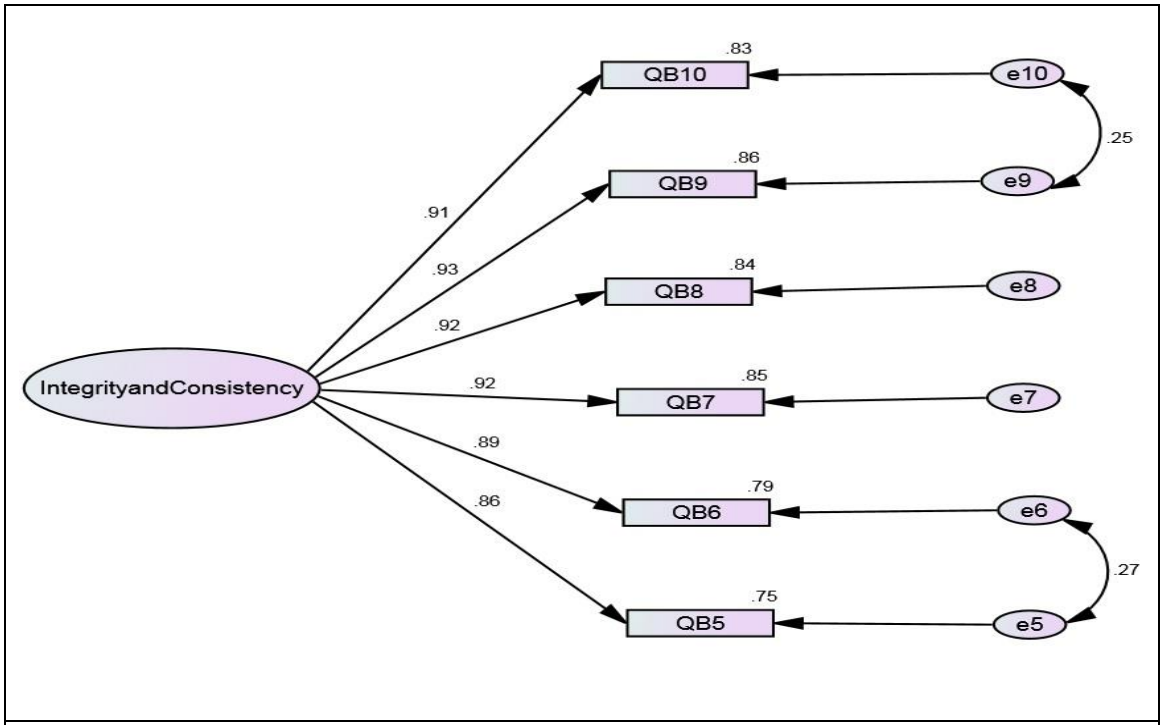

X^2= 8.728, df = 7; p-value =.273; Cmin/df =1.247; CFI =.999; GFI=.987, NFI=.995, RMSEA= .033

Figure 5.17: Confirmatory factor analysis of the integrity (consistency) components

The aspects QB9 (my bank keeps its word) followed by QB8 (my bank acts in the best interest of the customer) and Q7 (my bank conducts transactions fairly) had the highest factor loadings and contributed the most to the construct. This means that integrity and consistency were measured by the bank acting in the best interest of the customer, keeping its word and conducting transactions fairly. The regression weights gave significant critical ratios, all of them with values above 19 and p-values of less than .001. All the above items were retained to be used in the SEM.

5.9.1.3 Confirmatory factor analysis of the value alignment component

The value alignment was measured using the following four items.

- QB11 - my bank has the same values as me;
- QB12 - my bank does what it takes to make me happy;
- QB13 – my bank has the same concerns as me; and
- QB14 – my bank is receptive to my needs.

All the factor loadings were more than .7 as shown in Figure 5.18 which shows the fit indices provided by the CFA output and the results showed that the model is a good fit.

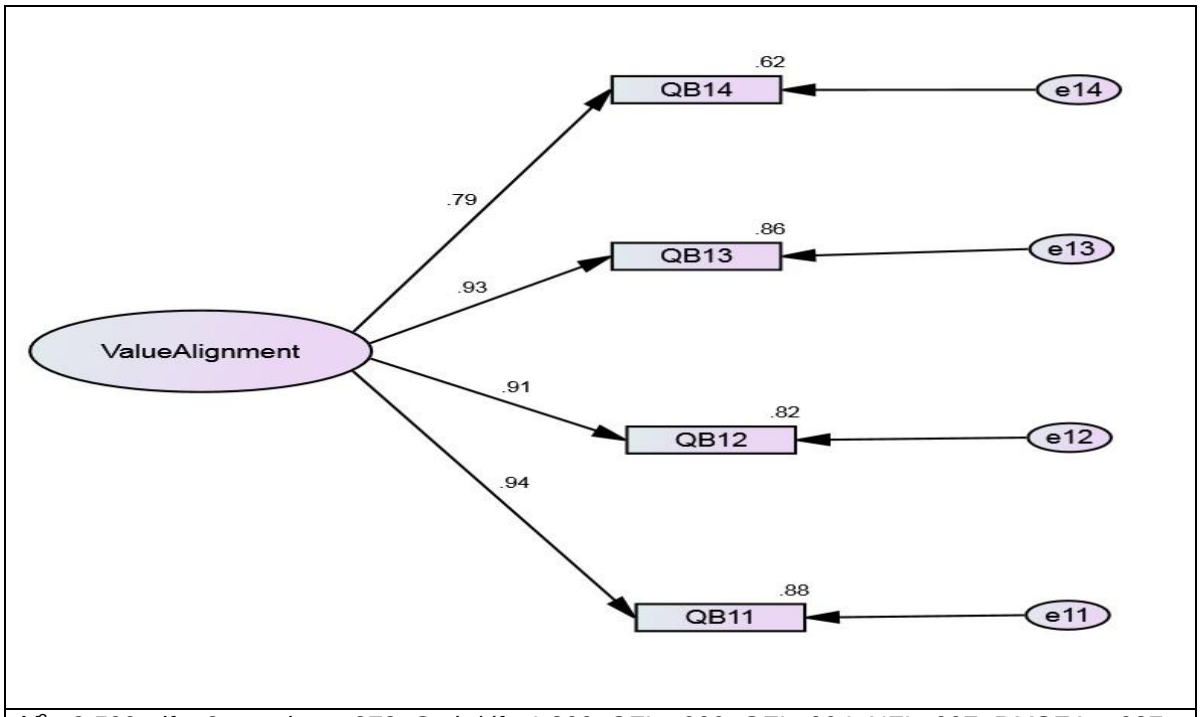

X^2= 2.599, df = 2; p-value =.273; Cmin/df =1.300; CFI =.999; GFI=.994, NFI=.997; RMSEA= .037

Figure 5.18: Confirmatory factor analysis of the value alignment components

The aspects QB11 (my bank has the same values as me) and QB13 (my bank has the same concerns as me) had the highest factor loadings and contributed the most to the construct. Thus, value alignment was measured most by the bank having the same values and concerns as the customer. All the regression weights had significant critical ratios which were all above 15 with p-values of less than .001. All the above items were retained to be used in the SEM.

5.9.1.4 Confirmatory factor analysis of the benevolence component

Initially, there were five items measuring the benevolence item. The item QB15 (my bank is responsive when contacted) was dropped after the multicollinearity tests since it had tolerance values of less than .1 and a Variance Inflation Factor (VIF) greater than 10.

- QB16 – my bank shows respect for the customers;
- QB17 – my bank treats its customers fairly;
- QB18 – my bank competently handles all my requests; and
- QB19 – my bank communicates clearly.

The results in Figure 5.19 show that the model is a good fit.

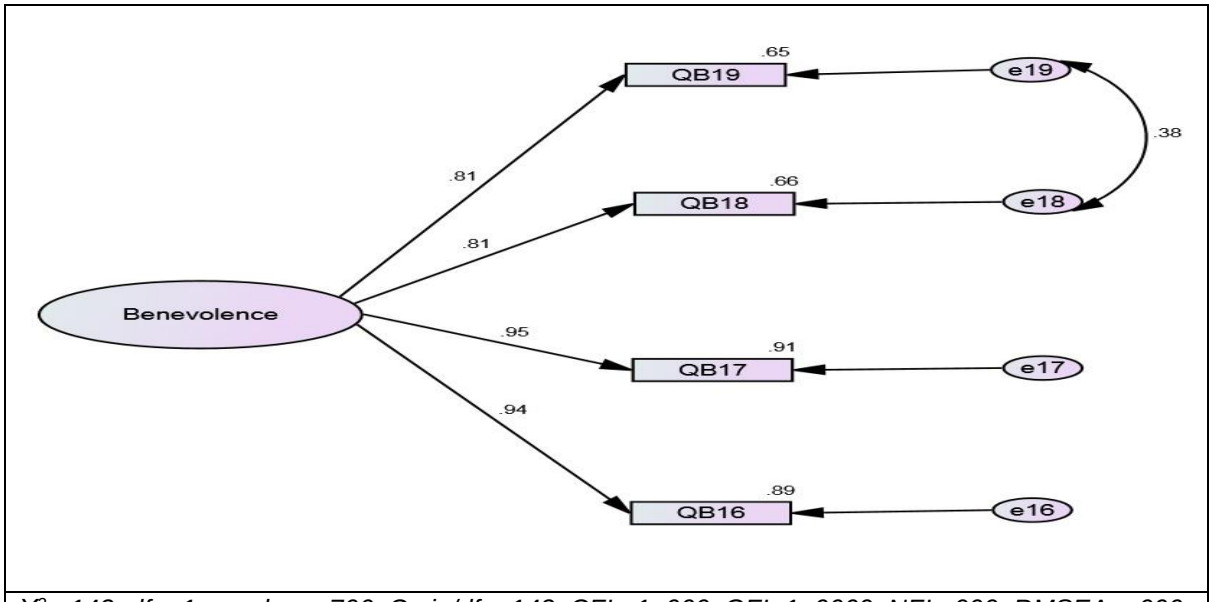

X^2=.143, df = 1; p-value =.706; Cmin/df =.143; CFI =1 .000; GFI=1 .0009, NFI=.999, RMSEA= .000

Figure 5.19: Confirmatory factor analysis of the benevolence components

Looking at Figure 5.19, all factor loadings were above.8. The regression weights were all significant with critical ratios all more than 17. and p-values of less than *.001*. The most contributing aspects were QB17 (my bank treats its customers fairly) and QB16 (my bank shows respect for the customers). Benevolence was measured most by the respect and treatment given to customers. All the items except, QB15 were retained to be used in the SEM.

5.9.1.5 Confirmatory factor analysis of the communication components

The communication construct was measured by the following items:

- QB20 - my bank communicates regularly;
- QB21 - my bank informs me regularly on new developments;
- QB22 – my bank acts as I would; and
- QB23 – my bank informs me immediately of any problems.

A confirmatory factor analysis was done to the construct, and all the loadings were at least.8 as shown in Figure 5.20. The confirmatory factor analysis resulted in the aspects “my bank

communicates regularly," and "my bank informs me regularly on new developments" having the highest factor loadings. The results of the CFA are shown in Figure 5.20.

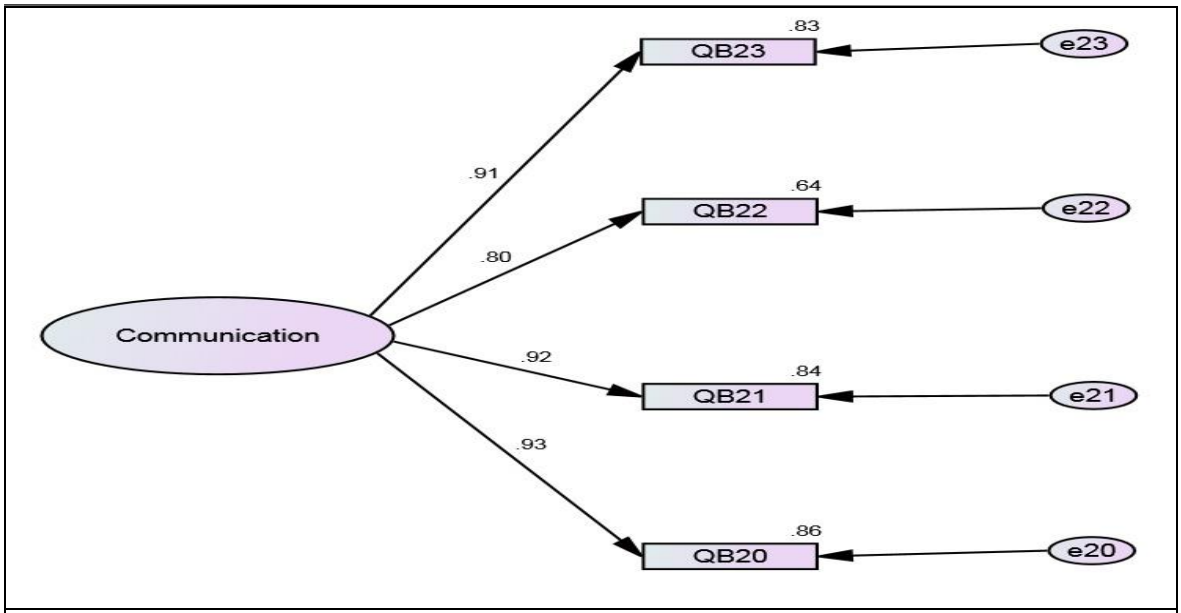

X^2= 1.687, df = 2; p-value =.430; Cmin/df =.843; CFI =1 .000; GFI=.996, NFI=.998, RMSEA= .000

Figure 5.20: Confirmatory factor analysis of the communication components

This is an indication that communication is mostly measured by the frequency of communication with the customer and the release of new information to the customer. The regression weights gave significant critical ratios, all of them with values above 16 and p-values of less than .001. All the items were retained to be used in the SEM model.

5.9.1.6 Confirmatory factor analysis of the structural assurance components

After the reliability analysis, the item QB25 (I believe my bank complies with the banking legal framework) was dropped from the analysis due to low reliability. The construct was now left with the following three items:

- QB24 - I believe my bank is very secure;
- QB26 - I believe my funds are safe in my bank; and
- QB27 – I believe the legal framework in the country protects the depositor.

A confirmatory factor analysis showed all items having factor loadings of .8 and above as shown in Figure 5.21.

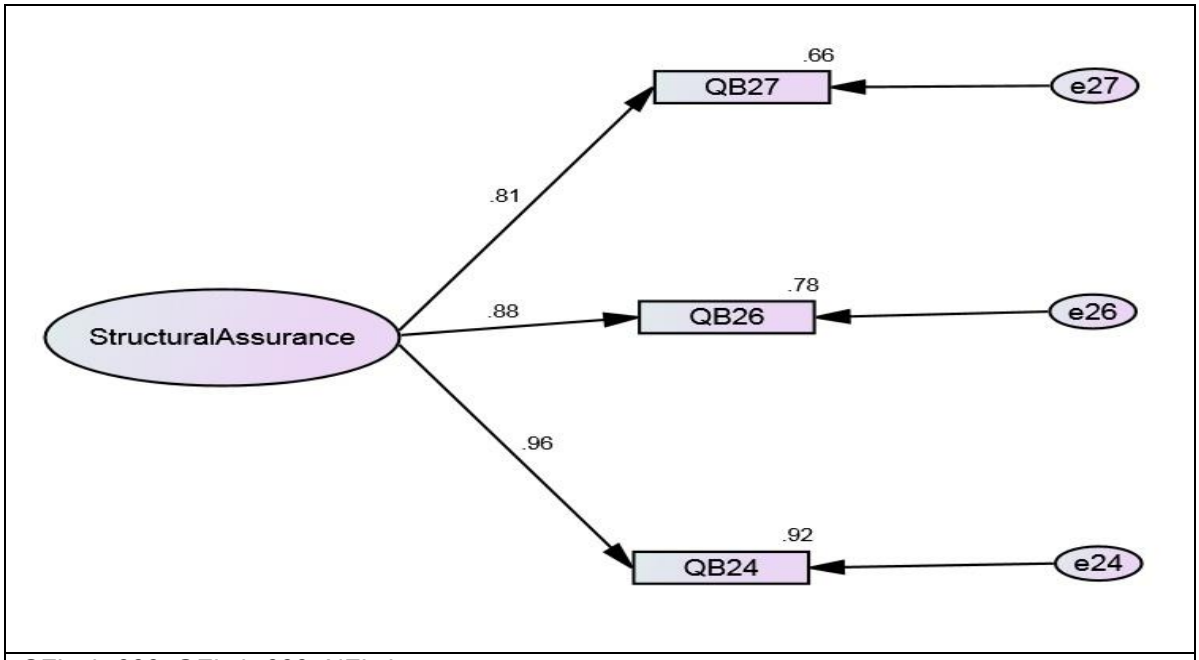

CFI =1 .000; GFI=1 .000, NFI=1

Figure 5.21: Confirmatory factor analysis of the structural assurance components

The aspects QB24 (I believe my bank is very secure) followed by QB26 (I believe my funds are safe in my bank) were the ones with the highest factor loadings and contributed the most to the construct. It means structural assurance is measured by security and safety of funds. The regression weights gave significant critical ratios, all of them with values above 15 and p-values of less than .001. The model had 0 degrees of freedom indicating that it was just identified. All the above constructs were retained to be used in the SEM.

5.9.1.7 Confirmatory factor analysis of the organisational trustworthiness components

The construct was measured by the following four items.

- QC1 – my bank has a reputation for being honest;
- QC2 – my bank has a reputation for looking after its customers;
- QC3 – my bank has a reputation for being reliable; and
- QC4 – Overall, I feel my bank is trustworthy.

All factor loadings were above .9 and Figure 5.22 shows the fit indices provided by the CFA output. The results showed that the model is significant to the data.

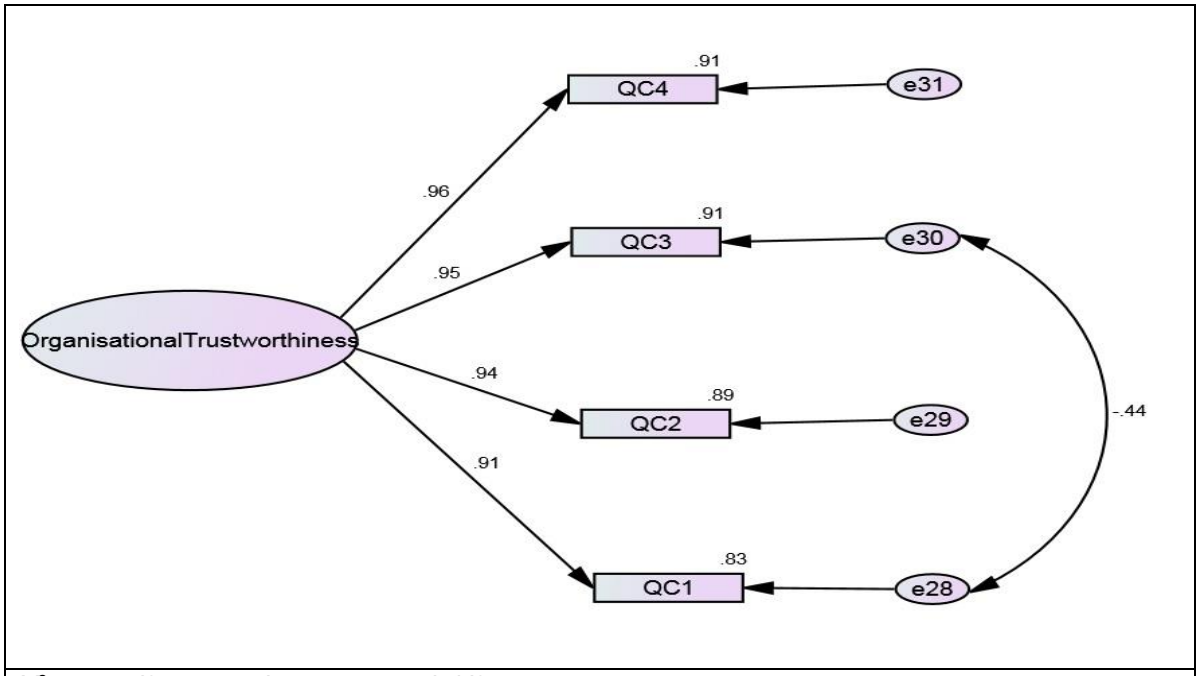

X^2=.284, df = 1; p-value =.594; Cmin/df =.284; CFI =1 .000; GFI=.999, NFI=1, RMSEA= .000

Figure 5.22: Confirmatory factor analysis of the organisational trustworthiness components

The aspects QC4 (Overall, I feel my bank is trustworthy) followed by QC3 (My bank has a reputation for being reliable) had the highest factor loadings and contributed the most to the construct. Organisational trustworthiness was measured by trustworthiness of the bank and its reliability. All the regression weights had significant critical ratios with values above 20 and p-values of less than .001. All the constructs were retained to be used in the SEM.

5.9.1.8 Confirmatory factor analysis of the affective commitment components

The affective commitment construct was mentioned by four items which are:

- QD1 - I identify myself with the bank mission and activities;
- QD2 - I have in myself a sense of belonging to the given bank;
- QD3 – I like to cooperate with the bank staff officers; and
- QD4 – I would be very happy to spend the rest of my life banking with my bank.

A confirmatory factor analysis was done to the construct and all the loadings were more than .9 as shown in Figure 5.23. The results showed that the model is a good fit.

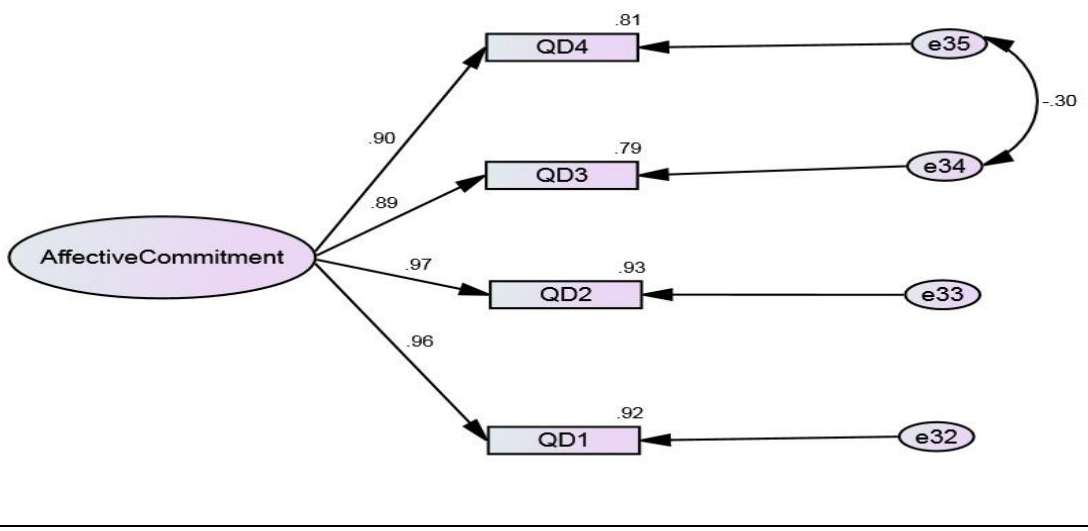

X^2=.447, df = 1; p-value =.504; Cmin/df =.447; CFI =1 .000; GFI=.999, NFI=1, RMSEA= .000

Figure 5.23: Confirmatory factor analysis of the affective commitment components

Looking at Figure 5.23, the regression weights were all significant with critical ratios all more than 17 and p-values of less than .001. The items QD2 (I have in myself a sense of belonging to the given bank) and QD1 (I identify myself with the bank mission and activities) contributed most to the construct. Affective commitment was mostly measured by sense of belonging to the bank and identification with the bank mission and values. All the items were retained to be used in the SEM.

5.9.1.9 Confirmatory factor analysis of the behavioural intention components

The behavioural intentions was measured using the following items:

- QD5 - I intend to continue using my bank in the future;
- QD6 - I will try new products services that are provided by my bank;
- QD7 – I am fully ready to recommend my bank to everybody who might ask; and
- QB8 – I will say positive things to other people about the services provided by my bank.

The confirmatory factor analysis resulted in the aspects “I am fully ready to recommend my bank to everybody who might ask,” and “I will say positive things to other people about the services provided by my bank” having the highest factor loadings. The results of the CFA are shown in Figure 5.24.

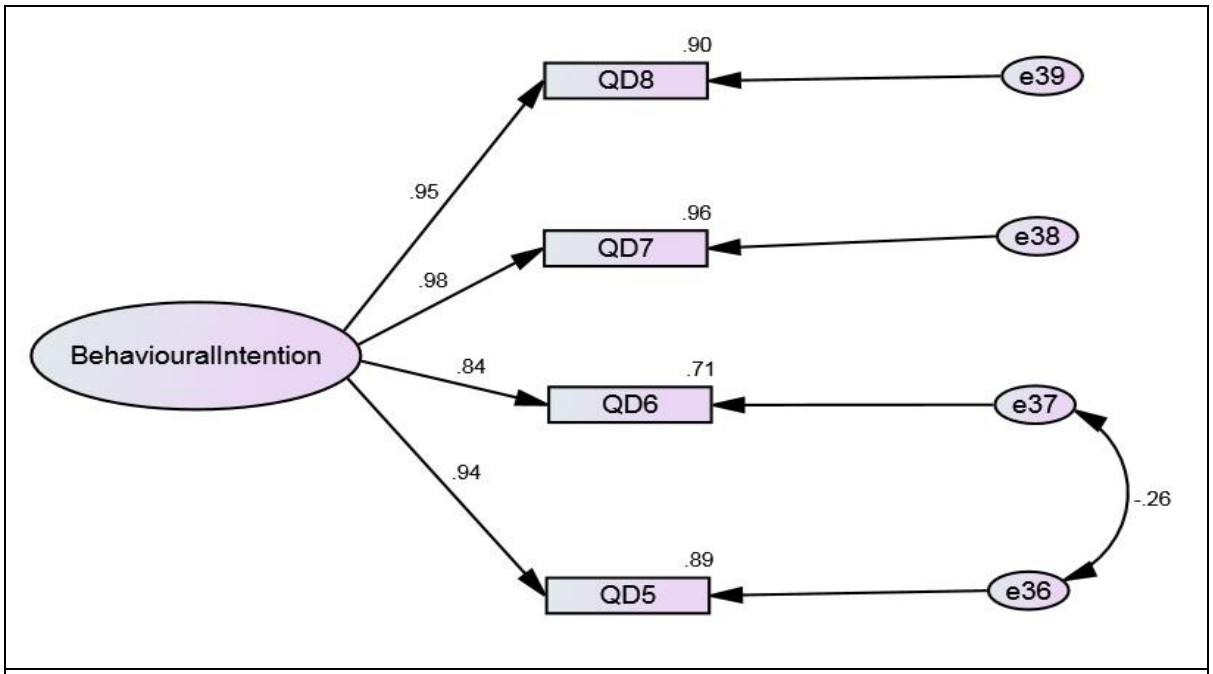

X^2=.993, df = 1; p-value =.319; Cmin/df =.993; CFI =.1 .000; GFI=.998, NFI=.999, RMSEA= .000

Figure 5.24: Confirmatory factor analysis of the behavioural intention components

Behavioural intentions was measured, mostly by customers saying positive things about the bank and recommending the bank to other people. This confirms the earlier findings of the descriptive statistics that the majority of the respondents agreed that they were willing to recommend the bank to other potential customers and to say positive things about the bank. The regression weights gave significant critical ratios, all of them with values above 18 and p-values of less than .001. Thus the above items were retained to be used in the SEM.

5.9.1.10 Confirmatory factor analysis of the measurement model

The confirmatory factor analysis consisting of all constructs was done and all factor loadings were more than .9 as shown in Figure 5.25. According to Hair *et al.* (2014), standardised loading estimates should be .5 or higher, and ideally .7 or higher.

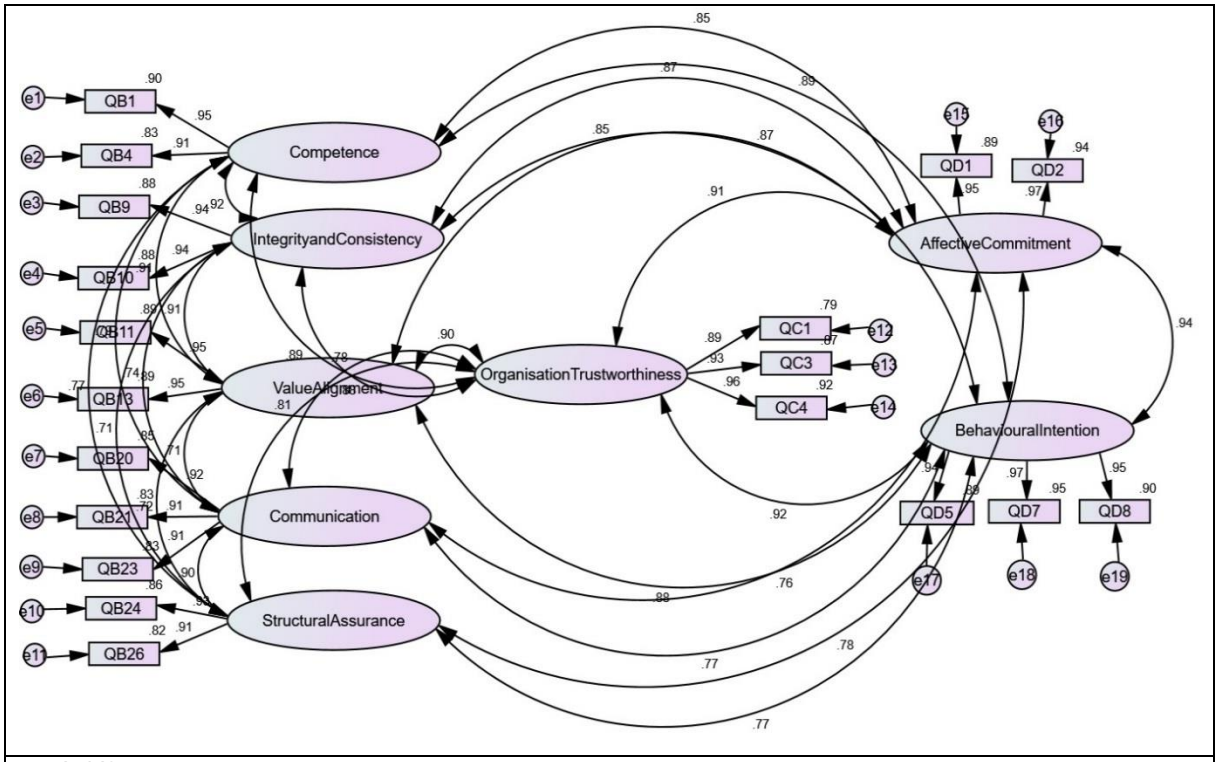

Cmin/df =1.926 CFI =.979; GFI=.882, NFI=.958, TLI=.973; RMR =.033; RMSE= .065

Figure 5.25 Confirmatory factor analysis of the model

The summary statistics of the model are shown in Table 5.37 below.

Table 5.37: Model Fit Measures for Confirmatory Factor Analysis

Measure	Estimate	Thereshold	Interpretation
CMIN	227.109	-	-
DF	124.000	-	-
CMIN/DF	1.832	Between 1 and 3	Excellent
CFI	.984	$> .95$	Excellent
SRMR	.021	$< .08$	Excellent
RMSEA	.061	$< .06$	Excellent
Pclose	.082	$> .05$	Excellent

The absolute fit index used to assess the model were chi-square value and probability value, root mean square error of approximation (RMSEA), standardised root mean residual (SRMR) and goodness of fit index (GFI). Looking at the overall fit indices, the value of chi-squared (χ^2) was equal to 227.109 with 124 degrees of freedom and a probability value of less than .001. As alluded by Hair et al., (2014), the Chi-square increases as the sample size increase, thus it is a mathematical function of the sample size which makes it difficult to achieve model fit

especially when large sample sizes are used. This resulted on the study using the χ^2 over degrees of freedom (CMIN/DF), that is, the minimum discrepancy because it is considered as an adequate measurement. The RMSEA and SRMR were .061 and .021 respectively and the GFI was .905. In this case the RMSEA and SRMR meets the required level as they are below .08 and the GFI is above .95. The model is a good fit.

The incremental fits used to assess the model were comparative fit index (CFI), normed fit index (NFI), and Tucker Lewis Index (TLI). The values were .984, .965 and .977. All were above .95 indicating that the measurement model was a good fit. In this case the measurement model showed a good overall fit. The Parsimony fit index used was AGFI and it was .854 and it was acceptable since it was close to .9.

5.9.1.11 Construct validity

As indicated in methodology chapter, construct validity has three components: convergent, discriminant and nomological validity. Convergent validity was measured using Average Variance Extracted (AVE) and construct reliability (CR). Convergent validity was achieved if all AVE were greater than .5, that is, $AVE > .5$ and all construct reliabilities were greater than AVEs, that is, $CR > AVE$. Discriminant validity was measured comparing square root of AVEs and inter-construct correlations as proposed by Fornell and Larcker (1981). Nomological validity answers the question whether the overall model is considered valid and it is tested by examining whether the correlations among the constructs in a measurement theory makes sense. In this case the matrix of construct correlations can be useful in this assessment.

Convergent Validity

Convergent validity was measured using CR and AVE. The information is shown in Table 5.38.

Table 5.38: Standardised loadings, construct reliability and AVE

Construct items	Std. loading	Construct reliability	AVE
Competence			
QB1	.951		
QB4	.910	.928	.866
Integrity and Consistency			
QB9	.937		
QB10	.940	.937	.881
Value Alignment			
QB11	.946		
QB13	.945	.944	.894
Communication			
QB20	.920	.937	.833

Construct items	Std. loading	Construct reliability	AVE
QB21	.909		
QB23	.910		
Structural Assurance			
QB24	.926		
QB26	.906	.913	.839
Organisational Trustworthiness			
QC1	.892		
QC3	.933		
QC4	.959	.949	.861
Affective communication			
QD1	.945		
QD2	.970	.957	.918
Behavioural Intentions			
QD5	.943		
QD7	.973		
QD8	.949	.969	.912

Looking at Table 5.38, all AVEs were greater than .5 and CR was greater than AVE. Thus convergent validity was achieved.

Discriminant Validity

According to Fornell and Larcker (1981), discriminant analysis can be achieved by ensuring that the square root of AVE is greater than the inter-construct correlations. Secondly the maximum of shared variance (MSV) should be less than AVE. Table 5.39 gives the diagonal matrix as square roots of AVE and the bottom half of the table are the inter-construct correlations while the top half are the squared inter-construct correlations (SICs).

Table 5.39: AVE, MSV, Inter-construct correlations and Squared Inter-construct correlations (SICs)

Construct	AVE	MSV	1	2	3	4	5	6	7	8
1. Intergrity (consistency)	.881	.849	**.939**	.848	.830	.551	.504	.767	.757	.752
2.Competency (ability)	.866	.849	.921***	**.931**	.834	.619	.599	.794	.726	.785
3. Value alignment	.894	.833	.911	.913	**.945**	.503	.514	.803	.728	.767
4. Communication	.833	.807	.742	.787	.709***	**.913**	.806	.605	.576	.594
5. Structural assurance	.839	.807	.710***	.774	.717***	.898***	**.916**	.658	.602	.594
6. Deposition of trustworthiness	.861	.840	.876***	.891***	.896***	.778***	.811***	**.928**	.819	.841
7. Affective commitment	.918	.889	.870***	.852***	.853***	.759***	.776***	.905	**.962**	.889
8. Behavioural intentions	.912	.889	.867***	.886***	.876***	.771***	.771***	.917	.943	**.957**
*** p < .001										

The square root of the AVEs are all greater than the corresponding inter-construct correlations and thus all AVEs are greater than the Squared Inter-construct Correlations (SICs). Thus discriminant validity was achieved.

5.9.2 The SEM Summary Statistics of the Estimated Model

In order to determine model fitness, ideally, there should be

- non-significant X^2 goodness of fit test
- CFI > .9 or preferably .95
- RMSEA < .08 (Lower RMSEA values indicate better fit)

In SEM, the model validity is checked first before looking at the paths and checking their significance. In this case, the following statistics were obtained.

Table 5.40: Model Chi-square results

Model	NPAR	CMIN	DF	P	CMIN/DF
Default model	56	256.491	134	.000	1.914
Saturated model	190	.000	0		
Independence model	19	6452.328	171	.000	37.733

The chi-square value of an over-identified (degrees of freedom greater than zero) model generally has degrees of freedom more than one. This model was over-identified since the degrees of freedom was 134 which were more than 0. The chi-square was 256.491 with a p-value less than .001. In this case, the value is significant. However, according to Hair *et al.* (2014), the chi-square value may be significant due to sample size. In this case, other fit indices are used. The CMIN/DF = 1.914 which is between 1 and 3. The other fit indices are presented in Table 5.41.

Using the GFI the value is .893, which is slightly below the cut of value of .9. The results of the other measures of fitness are shown in Table 5.41.

Table 5.41: GFI model results

Model	RMR	GFI	AGFI	PGFI
Default model	.038	.893	.849	.630
Saturated model	.000	1.000		
Independence model	1.161	.090	-.011	.081

The GFI shows a value below.9. According to Hair *et al.* (2014), the GFI is still sensitive to sample size due to the effect of *N* on sampling distribution and the possible values are 0 to 1, with higher values indicating better fit. They further indicate that recent developments of other

fit indices have led to the decline of its usage. The incremental fit indices are discussed in Table 5.42.

Table 5.42: CFI model results

Model	NFI	RFI	IFI	TLI	CFI
Default model	.960	.949	.981	.975	.980
Saturated model	1.000		1.000		1.000
Independence model	.000	.000	.000	.000	.000

Hair *et al.* (2014), indicated that the possible range of CFI values is 0 to 1 with higher values indicating better fit. CFI values of greater than .9 are considered good. The value for CFI, TLI and NFI are .980, .975 and .960 respectively. All fit indices are greater than the cut-off point of .9 indicating that the model is good.

The last measurement of goodness of fit to be presented is RMSEA which is in Table 5.43.

Table 5.43: RMSEA model results

Model	RMSEA	LO 9O	HI 9O	PCLOSE
Default model	.063	.052	.075	.032
Independence model	.402	.394	.411	.000

The RMSEA is a “badness of fit” index in that a value of 0 indicates the best fit and higher values indicate worse fit. The RMSEA should be below .08. In this case RMSEA for the default model is .068 which is less than .08 signifying a good fit.

The summary statistics of the model are show in Table 5.44

Table 5.44: Model Ft Measures for Structural Model

Measure	Estimate	Thereshold	Interpretation
CMIN	256.491	-	-
DF	134.000	-	-
CMIN/DF	1.914	Between 1 and 3	Excellent
CFI	.980	$> .95$	Excellent
SRMR	.024	$< .08$	Excellent
RMSEA	.063	$< .06$	Excellent
Pclose	.032	$> .05$	Acceptable

Now that the model fits the data, ideally, the researcher will look at the paths. Table 5.45 gives the multiple regression weights from the model in AMOS.

Table 5.45: The multiple regression weights from the model

Hy		Estimate	S.E	CR	P
H_2	Organisation trustworthiness←*Integrity/consistency*	.222	.099	2.252	.024
H_4	Organisation trustworthiness ←*Value Alignment*	.308	.086	3.590	***
H_5	Organisation trustworthiness ←*Communication*	-.025	.080	-.318	.751
H_6	Organisation trustworthiness ←*Structural Assurance*	.276	.081	3.431	***
H_1	Organisation trustworthiness ←*Competence*	.138	.102	1.351	.177
H_8	*Affective Commitment*← Organisation Trustworthiness	1.061	.054	19.821	***
H_7	*Behavioural Intentions*← Organisation Trustworthiness	.616	.112	5.475	***
H_9	*Behavioural Intentions* ← *Affective Commitment*	.646	.098	6.617	***
	QB9←*Integrity /Consistency*	1.000			
	QB10←*Integrity / Consistency*	1.030	.038	26.980	***
	QB13← *Value Alignment*	.991	.034	28.772	***
	QB11← *Value Alignment*	1.000			
	QB23←*Communication*	1.072	.047	22.860	***
	QB21←*Communication*	1.006	.044	22.727	***
	QB20←*Communication*	1.000			
	QB24←*Structural Assurance*	1.000			
	QB26←*Structural Assurance*	1.056	.048	21.927	***
	QB4←*Competence*	.929	.037	25.429	***
	QB1←*Competence*	1.000			
	QC1← organisation trustworthiness	1.000			
	QC3← organisation Trustworthiness	1.213	.053	22.816	***
	QC4← organisation Trustworthiness	1.181	.049	24.209	***
	QD1← *Affective Commitment*	1.000			
	QD2← *Affective Commitment*	1.049	.031	33.357	***
	QD5← *Behavioural Intentions*	1.000			
	QD7← *Behavioural Intentions*	.910	.027	34.178	***
	QD8← *Behavioural Intentions*	.868	.028	30.698	***
***** means the p-value is less than .001**					

Looking at Table 5.45, the critical ratios (CRs) for all variables range from -.318 to 34.178. The values -.318, and 1.351 are not significant. The remaining paths are greater than 2 indicating that the estimate is statistically significantly different from 0 except the paths *Organisation Trustworthiness ←Communication, and Organisation Trustworthiness ←Competence.* For a path to be significant, the p-value should be less than .05, so that you reject the hypothesis that H_0: $\beta=0$. Looking at the significant paths, except for the path *Organisation Trustworthiness ←Intergrity/consistency* with a p-value of .024, the remaining paths are all highly significant with p-value less than .001. From this table, the tests and interpretation for results for each hypothesis proceeded as below. A construct was deemed significant as a predictor of another latent construct if the p-value was less than 5% and was deemed to have a positive impact if the estimated coefficient (β) was positive (greater than 0).

The standardised estimates are shown in Table 5.46 below:

Table 5.46: Standardised estimates

Hypothesis	Structural relationship	Standardised Estimate parameter
H_2	Organisation trustworthiness←*Integrity/Consistency*	.238
H_4	Organisation trustworthiness ←*Value Alignment*	.353
H_5	Organisation trustworthiness ←*Communication*	-.028
H_6	Organisation trustworthiness ←*Structural Assurance*	.299
H_1	Organisation trustworthiness ←*Competence*	.160
H_8	*Affective Commitment*← Organisation Trustworthiness	.924
H_7	*Behavioural Intentions*← Organisation Trustworthiness	.443
H_9	*Behavioural Intentions*← *Affective Commitment*	.533
	QB9←*Integrity /Consistency*	.936
	QB10←*Integrity / Consistency*	.941
	QB13← *Value Alignment*	.946
	QB11← *Value Alignment*	.945
	QB23←*Communication*	.909
	QB21←*Communication*	.908
	QB20←*Communication*	.921
	QB24←*Structural Assurance*	.925
	QB26←*Structural Assurance*	.907
	QB4←*Competence*	.914
	QB1←*Competence*	.947
	QC1← organisation trustworthiness	.894
	QC3← organisation Trustworthiness	.926
	QC4← organisation trustworthiness	.945
	QD1← *Affective Commitment*	.945
	QD2← *Affective Commitment*	.970
	QD5← *Behavioural Intentions*	.943
	QD7← *Behavioural Intentions*	.972
	QD8← *Behavioural Intentions*	.951

Benevolence was taken from the model since its inclusion resulted in the model being a poor fit. Thus hypothesis 3 was not tested.

Hypothesis 1: Competence has a positive impact on trustworthiness

Table 5.45 shows that the *p-value =.177* with β= .138. Since p-value is greater than .05, we fail to reject the null hypothesis of no relationship (H_0: $\beta=0$) and conclude that the parameter is not significantly different from zero (there is no relationship). The results confirmed that competency did not have a significant positive impact on trustworthiness ($\beta = .138, p>.05$). However, for every increase of one unit in competence, organisation trustworthiness increases by .138. The contribution of competence is insignificant.

Hypothesis 2: Integrity (Consistency) have a positive impact on trustworthiness

Looking at the results in Table 5.45, integrity (consistency) components have a positive relationship with organisational trustworthiness measures. The p-value = .024 and β=.222.

Thus, integrity and consistence showed a positive significant impact on trustworthiness (β = *.222, p-value* < *.05*) at the 5% level of significance. Thus, respondents still viewed truthfulness and uniformity in services they received from banks as contributing to their trust in the banks at the 5% level. For every increase of one unit in integrity and consistency, organisation trustworthiness increases by .222. More trust is retained in a bank which shows high integrity and consistency.

Hypothesis 3: Benevolence has a positive impact on trustworthiness

Benevolence was not part of the model, and hence a relationship could not be determined, because inclusion of benevolence made the model a poor fit.

Hypothesis 4: *Value Alignment has a positive impact on trustworthiness.*

Results from the hypothesis test indicated that value alignment had a significant effect on trustworthiness. (β = *.308, p-value* < *.05*). Since the p-value is less than .05, the null hypothesis of no impact is rejected at the 5% level of significance. For every increase of 1 unit in value alignment, organisational trustworthiness increases by .308. Customers have their own values which banks should take into consideration. The incongruence of personal values and organisational values will lead to loss of organisational trustworthiness by customers. It is the responsibility of banks to identify these personal values and then align them to match with their organisational values, mission and goals.

Hypothesis 5*:* Communication has a positive impact on trustworthiness.

Table 5.45 shows that the β = .-.025 with a p-value = .751, thus the null hypothesis of no impact is not rejected at the .05 level of significance. Communication does not impact on organisation trustworthiness. However, for every increase of one unit in communication, organisation trustworthiness decreases by .025. Results from the above analysis indicated a negative insignificant impact of communication on organisational trustworthiness β = *-.025, p-value* > *.05*. Customers trust a bank which keeps them updated on new developments. In recent years, the Zimbabwean banking sector has been faced with unplanned closures and re-branding which caught some customers by surprise. This has left the general populace with limited trust in using banking services. However, trust could be retained in customers if such events were to occur when the banking public have been advised of the likelihood of bank closures prior to them happening.

Hypothesis 6*:* Structural Assurance has a positive impact on trustworthiness.

Results indicated that structural assurance had a positive significant impact on trustworthiness (β = *.276, p-value <.05*). For every increase of 1 unit in structural assurance, organisational trustworthiness increases by .276. The legal framework, guarantees, regulations and other security recourses available will enlighten customers of the various formal structures in place to protect them thus determining the amount of trust customers place in the banking sector.

Hypothesis 7*:* Organisational trustworthiness has a positive impact on behavioural intentions.

Organisational trustworthiness was seen to be positively associated with behavioural intentions (β = *.616, p-value <.05*). For every increase of 1 unit in organisational trustworthiness, behavioural intentions increase by .616. Trust is based on the customers' perceptions of an organisation's potential ability. The amount or level of trust in a customer about a bank and its services will determine his/her attitude and behaviour towards that bank. When lacking trust, a customer will lose interest in services provided by a bank even if they may be beneficial recent developments. At its extreme, loss of trust will lead to customers quitting using that bank going for other options.

Hypothesis 8*:* Organisational trustworthiness has a positive impact on affective commitment*.*

The construct of organisational trustworthiness was seen to be highly significant and positively associated (β = *1.061, p-value <.05*) with customers' affective commitment. For every increase of 1 unit in organisational trustworthiness, affective commitment increases by 1.061. When customers have trust in a bank, they will have a sense of belonging and will be emotionally attached to it. By developing a good level of confidence in a bank, customers will desire to remain part of it.

Hypothesis 9*:* Affective commitment has a positive impact on behavioural intentions.

Affective commitment was seen to have a significant positive impact on behavioural intentions (β = *.646, p-value < .05*). For every increase of one unit in affective commitment, behavioural intentions increases by .646. Generally, in as much as people act out of emotions, customers also will also want to be associated with banks where they have strong sense of belonging and would want to be identified with the bank's mission. Negative sentiments from one customer about a particular bank may result in negative WOM which may ultimately result in loss of more customers due to bad publicity.

5.9.3 Summary of Results of Hypotheses Testing and Confirmed Relationships

As mentioned earlier on, the structural model was tested using SEM. The test of the structural model includes estimating the path coefficients, which indicate the strengths of the relationships between the exogenous constructs and the endogenous constructs and the R-square value, which represents the amount of variability that is accounted for by the exogenous constructs (predictors). The path coefficients in the SEM model represent the unstandardised regression coefficients. The structural model reflecting the assumed linear, causal relationships among the constructs was tested with the data collected from the validated measures. Figure 5.5 shows the results of the analysis.

The results of the estimated model are shown in the following section, and the codes were given in the confirmatory section. The measurement model was then converted to the structural model and the following model was obtained.

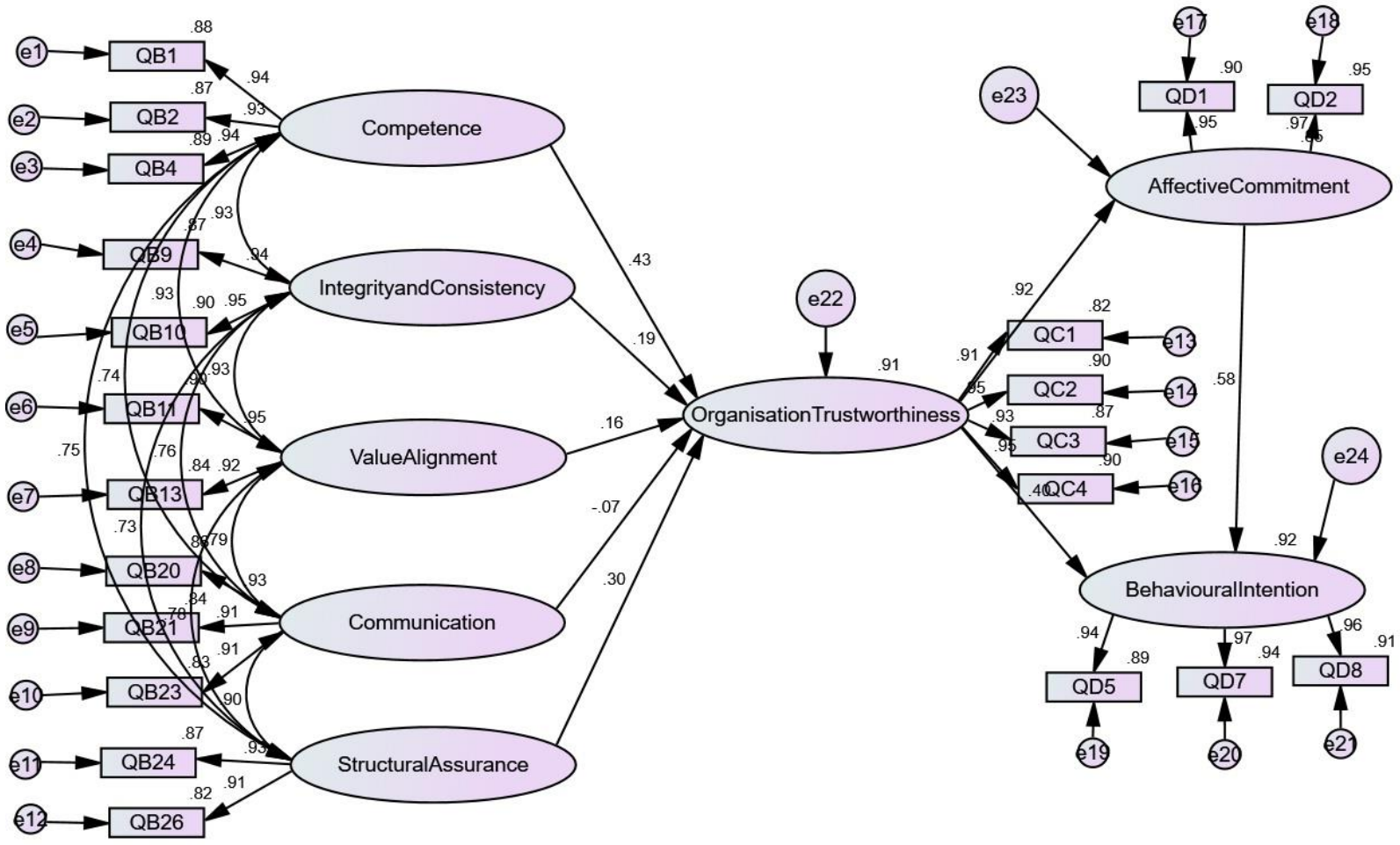

X^2= 346.371, df = 171; p-value < .001, Cnmin/df=2.026, CFI =.870; GFI=.976; NFI, =.953, TLI=.970, RMSEA = .068

Figure 5.26: The SEM results

Properties of the causal paths (unstandardised path coefficients (β), standard error of regression weight, probability values and hypotheses result) are shown in Table 5.47 and 5.48 respectively.

Table 5.47: The unstandardised regression weights and the corresponding probability values

Construct	Path	Construct	Unstandardised Path coefficients (β)	Standard Error of Regression Weight	Probability	Hypothesis Result
Organisational trustworthiness	<---	Integrity and consistency	.222	.099	.024	Reject null hypothesis at α = 0.05
Organisational trustworthiness	<---	Value alignment	.308	.086	p<.001	Reject null hypothesis at α = 0.05
Organisational trustworthiness	<---	Communication	-.025	.080	.751	Fail to reject null hypothesis at α = 0.05
Organisational trustworthiness	<---	Structural assurance	.276	.081	p<.001	Reject null hypothesis at α = 0.05
Organisational trustworthiness	<---	Competence	.138	.102	.177	Fail to reject null hypothesis at α = 0.05
Affective commitment	<---	Organisational trustworthiness	1.061	.054	p<.001	Reject null hypothesis at α = 0.05
Behavioural intention	<---	Organisational trustworthiness	.616	.112	p<.001	Reject null hypothesis at α = 0.05
Behavioural intention	<---	Affective commitment	.646	.098	p<.001	Reject null hypothesis at α = 0.05

Table 5.48: The result of the hypothesis testing

Hypothesis	Result
H1: Competence(ability) has a positive impact on trustworthiness	Not Supported
H2: Integrity (consistency) has a positive impact on trustworthiness	Supported
H3: Benevolence has a positive impact on trustworthiness.	Not Supported- removed from the final model
H4: Value alignment has a positive impact on trustworthiness.	Supported
H5: Communication has a positive impact on trustworthiness.	Not Supported.
H6: Structural assurance has a positive impact on trustworthiness	Supported
H7: Organisational trustworthiness has a positive impact on behavioural intentions	Supported
H8: Organisational trustworthiness has a positive impact on affective commitment	Supported
H9: Affective commitment has a positive impact on behavioural intentions.	Supported

It can be established from Table 5.48 above that the research hypotheses that were not supported are H1, H3 and H5. The final model established is shown in Figure 5.26 below.

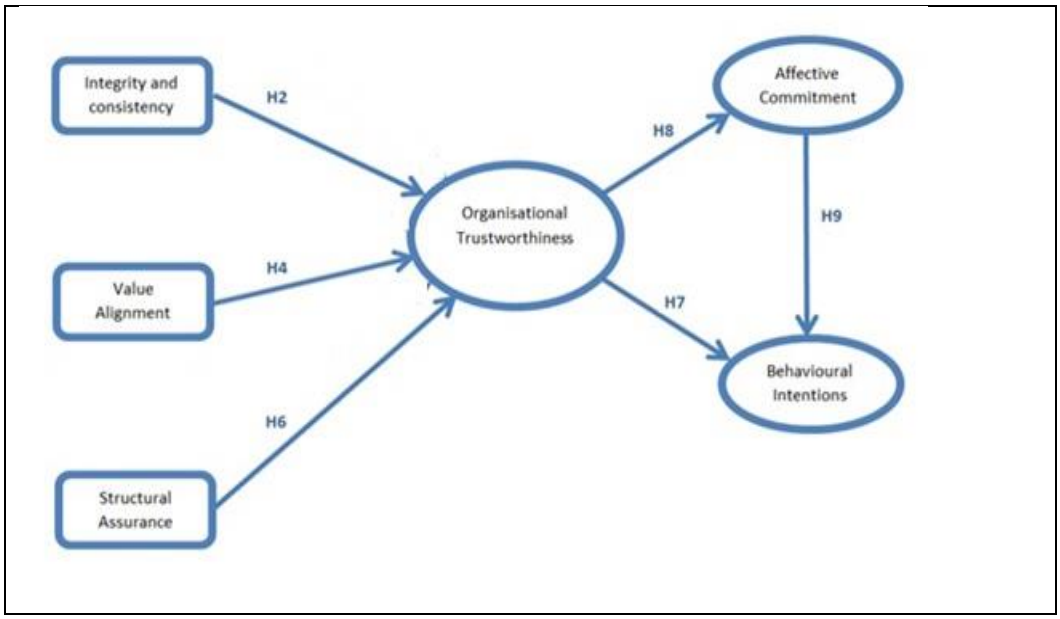

Figure 5.27: The SEM results – final model

Except for competence and communication, all paths have CRs greater than 2. The regression weights for the remaining paths are all significant and thus, the parameters are statistically different from 0. In this case, all of the unconstrained estimates are statistically significant and the data are described by the model above.

5.10 QUALITATIVE ANALYSIS AND FINDINGS

The second phase of the sequential mixed-method approach involved collecting qualitative data with the aim of understanding and explaining the results of the quantitative phase presented above. Data collection for the quantitative phase was achieved by conducting a survey, and after the analysis of the survey data, a qualitative approach in the form of semi-structured interviews was used to collect the qualitative data. The semi-structured interviews were conducted with people who had previously participated in the study survey and who had indicated their interest to participate in the follow up qualitative phase.

5.10.1 Participants' Profiles

Sixteen interviews were conducted with four participants from each bank who were purposely selected, the researcher interviewed one corporate customer and three individual customers from each of the four banks under study to ensure a fair balance in the data collected as there are more individual account holders than corporate bank account holders. For confidentiality

purposes, interviewees and their respective banks will be identified as “Bank A, Corporate customer A” as detailed in Table 5.49 below:

Table 5.49: Interviewees’ demographic details

INTERVIEWEE	TYPE OF CUSTOMER	BANK	YEARS WITH BANK	EDUCATION	GENDER
Interviewee Bank A1	Corporate	Bank A	11	Master’s degree	Male
Interviewee Bank A2	Individual	Bank A	17	Bachelor degree	Male
Interviewee Bank A3	Individual	Bank A	23	Diploma	Female
Interviewee Bank A4	Individual	Bank A	28	PHD	Male
Interviewee Bank B1	Corporate	Bank B	9	Master’s Degree	Female
Interviewee Bank B2	Individual	Bank B	8	Bachelor degree	Male
Interviewee Bank B3	Individual	Bank B	14	Master’s Degree	Male
Interviewee Bank B4	Individual	Bank B	16	Diploma	Male
Interviewee Bank C1	Corporate	Bank C	9	Master’s Degree	Female
Interviewee Bank C2	Individual	Bank C	5	Bachelor degree	Female
Interviewee Bank C3	Individual	Bank C	8	Bachelor degree	Male
Interviewee Bank C4	Individual	Bank C	5	Master’s Degree	Male
Interviewee Bank D1	Corporate	Bank D	12	PHD	Male
Interviewee Bank D2	Individual	Bank D	8	Diploma	Male
Interviewee Bank D3	Individual	Bank D	9	Master’s Degree	Female
Interviewee Bank D4	Individual	Bank D	10	Master’s Degree	Male

5.10.2 Interview Results

As previously discussed in the methodology chapter, the study adopted the sequential explanatory research design, which dictates that the results from phase one (survey) are used to inform data collection in phase 2. Subsequently, results from phase 1 were analysed, and interview questions were developed to explain and supplement the survey results. Each objective from the survey yielded results where the interviews could provide context and additional explanations about their banks’ trustworthiness and how it influences customers’ behavioural intentions and affective commitment towards their particular banks. Thus, the questions generated for the qualitative results were mostly guided by the findings of the survey results as per attached Appendix C: Interview guide.

Yin (2013) acknowledges that the use of computer software is useful in data analysis. However, he also argues that qualitative data analysis should be carried out with human consideration and interaction. In this study, the researcher used a style of rigorous empirical thinking to provide a high sense of consideration and interpretation of the data and to develop an appropriate analytical strategy. Following such a strategy allowed the researcher to treat the data fairly and helped to demonstrate any alternative interpretations (Yin, 2013). Given this context, this study followed a thematic analysis approach to analyse the qualitative empirical data. Interview transcripts were thematically analysed as per guidelines by Taylor-Powell and Renner (2003) who suggested the following stages in analysing qualitative data:

- Stage 1: Getting to know the data
- Stage 2: Focussing the analysis
- Stage 3: Categorising information
- Stage 4: Identifying patterns and connections within and between categories
- Stage 5: Interpretation

Following on from this process, significant statements were extracted and themes and content were identified from the data and ranked according to frequencies that were used to produce a report. The results of the data analysis are presented below:

5.10.2.1 Trustworthiness of banks

The first question was asked in order to determine participants' perceptions on the overall trustworthiness of their banks. The researcher wanted to establish the main reasons why certain bank customers would trust their banks, while others would not trust their banks. Findings indicated that there is an acknowledgement of lack of trust in banks; however, the general perception among most of the interviewees is that politics and an ineffective regulatory system are mostly responsible for the lack of trust and confidence in the sector. This implies that the lack of trust is more in the regulatory authorities rather than in individual banks. This view was supported by most interviewees; for example, Interviewees A2, B2 and C3 expressed lack of perceived bank trustworthiness of their respective banks, yet at the same time blaming the RBZ when they stated the following:

Interviewee A2

"*All banks in Zimbabwe are experiencing challenges and you will find out that the majority of people, me included do not trust the banks. What is there to trust, long queues, cash shortages, bond notes, high interest rates? No one is mad enough to trust any bank. Employees are spending days on end queuing for money and this is starting to affect productivity in the industries which are already struggling due to the prevailing volatile economic environment. Poor policies in the banking sector are continuously affecting the banking public further eroding our trust in banks"*.

Interviewee B2

"*Trustworthiness to me means that the bank will act in my best interests, these days I do not believe my bank is acting in my best interests, and this could be attributed to reasons way beyond their control that are taking place in the banking sector, and it seems we also lack visionary leaders in how to run a banking sector effectively".*

Interviewee C3

"I do not trust my bank simply because the bank is unable to give me my money when I want it, limiting my family's quality of life. Why do banks accept deposits knowing fully well they are incapable of giving the customer money when asked do so? Where is the regulatory mechanism in all this?"

Some respondents seem to still have favourable trustworthiness perceptions towards their respective banks. However, similar to the views of the interviewees A2, B2 and C3 mentioned above, they also expressed dissatisfaction with how political interference in the affairs of the RBZ was affecting consumer confidence in the banking sector. For example, Interviewees D4, A4 and A3 made the following comments:

Interviewee D4

"*My bank is trustworthy and it has managed to maintain high standards despite all the chaos in the banking sector. I also think my bank is able to give better service because it is not overcrowded like all the other locally owned banks. The majority of what is going on in the banking sector is politically conceived".*

Interviewee A4

"…what you must understand is that there is a link between RBZ and the banking system in Zimbabwe. Of the two, I trust my bank but do not trust the RBZ because the central bank has caused a lot volatility in the banking sector as most of their decisions are politically induced such that, we are in a constant state of anxiety, as you never know what changes can happen tomorrow".

Interviewee A3

"*I do trust my bank, but I have lost confidence in the banking sector, nothing is prudent about the inconsistent policies in the banking sector as a result, we are made to beg for our hard-earned cash and I blame the cash shortages on the Reserve Bank who are busy funding unplanned government expenditures at our expense".*

A small proportion of the interviewees expressed mixed feelings indicating that they were not sure whether they trusted their banks or not. Again, this could be because they were not sure if the banks were mostly to blame or it was because of other forces that were beyond the banks' control. For example, Interviewees C1 and B4 made the following comments:

Interviewee C1

"*Sometimes I feel I can trust my bank, but sometimes I do not trust the bank at all, the reason being that at times the bank is very helpful and provide solutions, sometimes the staff do not want to entertain any customer complaints making it difficult to trust the bank. I cannot blame the bank completely because of the struggles in the country".*

Interviewee B4

"I have mixed feelings about the issue of trusting my bank. The problem is you do not know whether the poor service that I sometimes experience is simply because they are taking advantage of challenges in Zimbabwe or because they are truly incapable of doing better because of circumstances like cash shortages that are beyond their control".

It is evident from the above comments that the majority of the interviewees do not trust the banking system and most of the interviewees clearly absolved their respective banks for lack of trust in the banking sector. Instead, they blame poor regulatory systems and at times the unstable political environment. Even interviewees (C1 and B4) who had mixed feelings about their banks' trustworthiness, put the blame for cash shortages on the RBZ. Interestingly, interviewees from Bank D, including Interviewee D4 quoted above, expressed trust and confidence perceptions towards their bank as they believe that the RBZ is mostly responsible for the inefficiencies in the banking sector. This is also consistent with findings from the quantitative phase, which indicated that Bank D customers exhibited high trustworthiness perceptions compared to the other banks. It is, therefore, suffice to conclude that Bank D customers have favourable trustworthy perceptions towards their bank compared to other banks under study. This could be because Bank D is a foreign-owned bank and there is a tendency to trust foreign banks more than locally-owned banks due to documented historical developments in the sector which resulted in a number of locally owned banks collapsing.

It is also important to note the emotions that are expressed in the participants' words for example "…*made to beg for our money*", "… *constant state of anxiety*" and "*chaos in the banking sector*". The comments allude to a state of desperation characterised by panic and anxiety suggesting a clear lack of confidence in the banking sector. An analysis of the qualitative data also revealed that cash shortages seem to be the biggest issue affecting all banks and it is apparent that most people prefer to keep their funds in cash form instead of using "plastic money" to facilitate transactions. This could be attributed to the low confidence levels in the banking sector which have prompted the majority of bank customers to prefer keeping their money at home as cash instead of depositing it in banks.

5.10.2.2 Structural assurance and trustworthiness of the banking sector

Results from the quantitative data analysis indicated that structural assurance is one of the constructs which has a significant positive impact on trustworthiness of banks in Zimbabwe. In fact, structural assurance is the trustworthiness determinant with the second highest correlation with trustworthiness. The researcher sought to get more insights as to why structural assurance is considered as critical in influencing bank customers' trustworthiness perceptions. The majority of interviewees expressed concern about the poor structural assurance in the banking sector stating that there are poor regulatory mechanisms in place, particularly poor policies that emanate from both the Government and the RBZ which significantly contributed to the decline of trust in the banking sector. For example, Interviewees AI, D3, B4 and C4 stated the following:

Interviewee A1

"*The Reserve bank has consistently failed in most of its policies starting from their de-regularising of the banking sector that paved way for incompetent banks resulting in massive bank failures. This is when most of us started having trust issues with banks".*

Interviewee D3

"*The RBZ does not seem to operate independently, they are just an extension of the Zimbabwean politics. It seems like their policies are more of trial and error and this has affected the majority of the banking population if not all. A lot of people have lost their money in banks that went down with the closed banks, and if there was proper monitoring of these banks by the RBZ, people would not have lost their money".*

Interviewee B4

"As long as the Reserve bank is driven by a political agenda, it will not make sound policies. Part of the reason why the banking sector is challenged is excessive government expenditure that is facilitated by the RBZ, which is unnecessarily putting pressure on the already limited resources in the country".

Interviewee C4

"Our government and its meddling in the operations of the Reserve bank has failed the banking population, from cash shortages, uncertainty about what currency to adopt resulting in the recent introduction of bond notes. My sister, would you deposit your US dollars and when you want to withdraw the money you get bond notes? What is there to trust?"

Two interviewees, including Interviewee B3 quoted below, blamed the poor structural assurance on banks stating that most banks were not acting in good faith:

Interviewee B3

"Indeed, there are issues in the rules and regulations affecting our banking system, especially in the past. I, however, feel it is wrong to blame everything on the Reserve Bank. Some of these banks are just greedy, charging exorbitant interest rates only to have them reviewed downwards by the Reserve Bank. Banks should not rely on the regulatory authorities to do the right thing; they must do the right thing if they want to gain our trust".

It is evident from the above analysis that the banking public in Zimbabwe have lost faith with how the RBZ is running the affairs of the banking sector and this has significantly eroded trust and confidence in the sector. If citizens of a country do not trust institutions like the RBZ which are meant to protect the interests of consumers, igniting bank customers' confidence becomes more challenging. It is also evident that some participants believe there is unwarranted government expenditure that is putting pressure on the country's already-depleted financial resources which in turn causes disequilibrium in the financial sector. Based on the study findings and the emerging contentious relationship between the bank customers and the bank regulatory authorities, one may conclude that as long as the stigma surrounding the RBZ as being politically driven is there, restoring trust and confidence in the banking sector may remain an elusive dream.

5.10.2.3 Effective communication and bank trustworthiness

The survey findings indicated that communication does not have a positive impact on bank trustworthiness. Instead, the findings revealed that there is a negative insignificant impact of communication on organisational trustworthiness. Thus, an increase in communication results in a decrease in organisational trustworthiness, although not significant. This negative correlation between communication and bank trustworthiness was somewhat a surprising finding considering that the majority of studies prevalent in literature confirmed the positive association of these two constructs for example, (Kharouf *et al*., 2014; Hurley *et al.,* 2014). It was deemed to be very important by the researcher to seek for an explanation of this surprising findings through a qualitative enquiry.

Findings from the qualitative findings seem to suggest the majority of participants (nine) believe that communication is generally poor in the banking sector and it seems most of the communication taking place is informal. Consequently, it can be argued that the informal

communication "Grape vine'' takes precedence over formal communication based on a significant number of the interviewee responses that included Interviewees B2 and C2 who stated the following:

Interviewee B2

"Nothing is ever communicated by banks these days, it is just a matter of take it or leave it, and this is why I just use my bank to get my money in and out, and if I had a choice, I would leave a zero balance all the time. I mostly rely on speculation as to the happenings in the banking sector".

Interviewee C2

"*We are not given notifications on any changes, and in the event that they are notifications, the notifications lack clarity, and, more often, they come very late leaving bank customers with limited choices. What surprises me is that most of the rumours you hear about changes in the banking sector tend to be true. For example, in most cases when banks close, rumours would have spread already and people start panicking, trying to withdraw all their savings before there is even formal communication about such a development".*

Based on the comments from Interviewees C1, and A3 below, it can also be argued that while there is an acknowledgement of poor communication in general, most of it is viewed as emanating from the RBZ.

Interviewee C1

"The truth is that communication is bad because there is nothing good to communicate. Banks do not make policies that are negatively affecting the banking sector. For example, my bank is very technologically advanced, and they have all the tools to communicate and, yes, they try their best to keep me posted. The problem is the issues that I want information on like the - US$200 million facility meant to finance the so-called 5% export incentive scheme, they do not have adequate information to give me about this facility neither does the RBZ clarify what the facility is all about, yet this is the clarification I want as a business person".

Interviewee A3

''Banks, in general, are not saying much, it seems there is an illusion that communication has taken place and the problem starts with the Reserve Bank, there is a lot of ambiguity in their statements which an ordinary bank customer like my mother does not understand. They leave much of the clarifications to be done by the media and to speculation, this is not the correct thing to do. On the other hand, banks are not very sure what to pass on to their customers, so

in most cases, they simply do nothing in terms of clarifying issues to do with changes in the banking sector".

However, although a few, two interviewees had a high opinion of their banks and believed that their banks were communicating effectively, for example

Interviewee D3

"*My bank is very good at communicating with me, I cannot fault them. Some of the things happening in Zimbabwe are way beyond their control and it will be wrong to blame them".*

Interviewee C3

"*My bank is mostly good at communicating particularly changes in the banking sector that affects customers directly".*

Based on the above comments, it is evident that customers are very agitated by poor communication or lack of it in the banking sector. The unexpected finding on the negative correlation between communication and trustworthiness was clarified by the qualitative analysis whereupon a significant number of the interviewees indicated that they mostly rely on rumours and speculation for the majority of communication taking place in the banking sector. Thus, bank customers tend to listen and act more on speculations rather than on the communication emanating from the banks/ banking sector in Zimbabwe. An example is that banks and the RBZ regularly assure the Zimbabwean banking public that their money is safe, but people still keep their money at home, suggesting they believe otherwise. It is also important to note that there is a general sentiment among the interviewees that the poor communication sometimes emanates from the RBZ. Consequently, banks are not so sure what to communicate suggesting that communication between the RBZ and banks seem to be vague and inconsistent at times. Thus, based on the study findings from both the quantitative and qualitative phase, it suffices to conclude that there is poor alignment of communication between the RBZ and the banks which is negatively affecting trustworthiness not only in individual banks but in the whole banking industry. Thus, poor communication is negatively affecting the trustworthiness of the banking industry as a whole.

5.10.2.4 Competence and bank trustworthiness

Findings from the quantitative analysis indicated that competence does not have a significant positive influence on trustworthiness. Through the follow-up interviews, the researcher sought to establish why there was an insignificant correlation between competence and

trustworthiness which is contrary to the majority of previous findings, for example Kharouf *et al.* (2014). In fact, the researcher sought to understand why bank customers in Zimbabwe do not consider competence as an important factor in evaluating their bank trustworthiness. A number of the interviewees indicated that their banks are competent but their ability to provide service excellence is mostly prohibited by the prevailing economic situation in the country as well as bad policies in the banking industry. For example, interviewees A2 and D2 stated the following:

Interviewee A2

"*I still regard my bank as competent despite the challenges I am currently experiencing in accessing my money. I say so because I have been with them for a long time and they used to be very good and the bank has been there forever if not the oldest bank in Zimbabwe. Surely to blame them for shortages and implying that they are not competent is not fair. We all know that banks are affected by poor policies and the harsh economic environment".*

Interviewee D2

"I regard my bank as competent because it does what is says it can do and I also know the challenges in the country. Expecting too much will be selfish of me".

A few interviewees strongly believed their banks were not competent and that their failure to deliver the expected service was deliberate. For example, Interviewees A4 and B1 stated the following:

Interviewee A4

"I think my bank takes customers for granted at times, they are taking advantage of what is happening in the country to give poor service. To me, my bank is not that efficient and I am not sure if it reliable either".

Interviewee B4

"It seems banks are now hiding behind challenges in the economy, surely they should be able to improve their service even in these challenging times especially considering that the banking sector is among the few sectors making super profits in Zimbabwe".

Two interviewees expressed mixed feelings on whether their banks were competent or not, Interviewees B2 and C3 said the following:

Interviewee B2

"I cannot say with certainty whether my bank is competent or not. There are other things they do well and somethings I am not happy about. For example, they wait for other banks to introduce new things like technology before they introduce it".

Interviewee C2

"I cannot conclusively say that my bank is competent because I am not sure whether their services delivery is mostly inhibited by challenges in the banking sector or not".

Interviewee C4 went further to suggest that competence should start with the Government and RBZ and only then can the other stakeholders like banks be able to show their competency. Interviewee C4 made the following comments:

Interviewee C4

"*Would it be fair to blame your maid for not doing the dishes when there is no water? Banks are failing to be competent because they are limited in accessing their number one resource-cash. People are not putting their money in the banks because of the uncertainty in the country and without cash, banks cannot deliver. The Government must be competent, the Reserve Bank must be competent and only then can banks be competent".*

Findings from the qualitative phase clarified findings from the quantitative phase as the interviewees provided an explanation as to why competency of banks was not a significant factor in influencing bank customers' trustworthiness perceptions in Zimbabwe. The main reason was that a significant number of bank customers believe that their banks are at times made to appear incompetent, because of circumstances beyond their control which include poor RBZ policies, government interference as well as the general economic challenges prevailing in the country. It is also evident from the responses that the study participants took into consideration their past experiences with their respective banks, which most of them admitted were satisfactory and, hence the belief that their banks are sometimes prohibited from offering expected services due to circumstances beyond their control. However, even though a few, there are some bank customers who strongly believe banks are not competent and were taking advantage of the negative economic outlook of the country to offer poor services intentionally.

5.10.2.5 Integrity (consistency) and bank trustworthiness

Integrity implies that the trustee will uphold a set of principles and values that the trustor finds acceptable (McKnight and Chervany, 2001). Consistency strengthens the predictability of the

bank's future performance while also helping to build trustworthiness (Butler and Cantrell, 1984). Findings from the quantitative phase indicated that integrity and consistency have the third highest positive impact on trustworthiness of banks compared to all the other trustworthiness determinants evaluated in this study. The researcher sought to establish why integrity (consistency) is highly valued by customers in their evaluation of bank trustworthiness. Responses from the interviews indicated that the high regard of integrity and consistency was based on the belief that banks were operating in a challenging economic environment where their integrity and consistency are on the radar and are highly regarded. However, the sentiments echoed by the majority of participants seem to indicate that prevailing challenges in the banks sector negatively impacts on the integrity and consistency of bank services. For example, interviewees AI, D3 and C1 stated the following:

Interviewee A1

"*My bank is consistent in their banking activities and I believe they have integrity because they keep their promises and on rare occasions when they fail to keep promises it is usually for reasons beyond their control like cash restrictions on visa cards".*

Interviewee D3

"*There is transparency and truthfulness in my dealings with my bank, inconsistencies are to be expected in this current economic environment, businesses like banks are sometimes restricted in offering services and products timeously".*

Interviewee C1 went further to give a practical example of how the prevailing economic conditions are negatively affecting the integrity of people and businesses in the country:

Interviewee C1

"*Unstable politics has led to unstable policies and this creates a lot of uncertainty in a country and to be honest this has negatively affected the integrity of businesses and people in general. I can give you a personal example of how I sometimes fail to pay my house keeper in time and this is not that I lack integrity and consistency it is simply because I would have experienced challenges in accessing cash from my bank and the reason why banks fail to give me cash on demand is because there is not enough money circulating in Zimbabwe. You can see the ripple effect of what is going on in our country".*

However, some participants, although a few in number, were of the opinion that their respective banks were not consistent and lacked integrity, for example, interviewee B1 who stated that:

Interviewee B1

"Integrity is critical to trusting a bank, so if there is no integrity it means that you cannot trust banks with your money and the reason why I just use my bank for transactional purposes only is because, in the past, some banks have shown lack of integrity by misusing depositors' funds which resulted in bank closures. As for consistency, this cannot be expected if there is no economic stability. What I mean about that is, at times banks are failing to be consistent not by choice but by unfavourable circumstances".

Integrity and consistency are regarded as measures of continuity which help to build trust in a banking sector. Only a few interviewees suggested that their respective banks lacked consistency and integrity. However, it is evident from the above comments that a significant number of the participants believe the perceived lack of integrity and consistency is a result of poor policies and politics, and, as such, they mostly do not blame the banks for lack of it. This also explains why a significant number of study participants still believe their banks had integrity and showed consistency in the delivery of their services.

5.10.2.6 Benevolence and bank trustworthiness

Benevolence is regarded as the extent to which a trustee (bank) is believed to want to do good for the trustor (bank customer), without necessarily being motivated by making profit (Mayer, Davis and Schoorman, 1995). Benevolence was dropped in the final model and the hypothesis was not tested. However, based on findings from similar studies which indicated that benevolence has a positive impact on trustworthiness, the researcher found it necessary to explore the benevolence construct further in the qualitative phase. The researcher sought to investigate the influence of benevolence on trustworthiness perception in the Zimbabwean banking sector. The majority of the interviewees indicated that while benevolence concerns were "good to have", it was not a priority in the current banking sector scenario because banks are not able to demonstrate a caring attitude, presumably because of the aforementioned challenges in the banking sector. For example, Interviewees C3 and B2 stated the following:

Interviewee C3

"*If a bank shows that they care about my welfare as their customer more than they care about making profits, it is a good to have. But again, showing that they care when they have limited resources is also challenging. I do not expect the bank to baby sit me but to just deliver the promised service".*

Interviewee B2

"Even if my bank is caring and values me, for me that caring should be shown in their ability to provide me with the services I require, for instances a housing loan or a school fees loan at affordable interest rates considering the harsh economic environment we are facing currently."

However, some participants including Interviewees C1 and A3 were adamant that banks valued making profits more than their customer needs by stating that:

Interviewee *C1*

"*Actions speaks louder than words, the bank actions so far are far from caring but more about maximising profits. If you check the bank's annual reports, they are still making super profits while most industries are failing to make ends meet*".

Interviewee A3

"As banks come under growing pressure from shareholders to deliver a good return on investment in these challenging times, they resort to high bank charges and poor service delivery, hence the reason why people are only using banks for transactional purposes. This is just an example of the uncaring attitude that has developed in our banking sector".

It is clear from the above comments, that most interviewees are not very concerned about banks showing a caring attitude that is not backed up by the expected service delivery; thus, simply sympathising with customer and not meeting the customer's needs is not enough. However, just like the responses from the previous questions posed earlier, one almost gets the sense that customers are no longer expecting much from the banks and are only expecting the basic services. This may be an indication of the low standards that are now prevalent and seem acceptable in the banking sector which should concern all the key stakeholders.

5.10.2.7 Value alignment aspects and bank trustworthiness

Morgan and Hunt (1994) define value alignment (they call this construct *shared values*) as the extent to which partners have beliefs in common about what behaviours, goals and policies are important or unimportant, appropriate or inappropriate, and right or wrong. Findings from the quantitative phase indicated that value alignment positively influences bank trustworthiness. In fact, it is the trustworthiness determinant with the highest influence on trustworthiness. With regard to value alignment in the qualitative phase, the researcher sought to understand what participants expected in terms of value alignment considering the current harsh economic environment prevailing in Zimbabwe. It was evident from the responses

received that the majority of participants were of the opinion that banks can do more in terms of aligning their values with their customers' values as evidenced by the responses below.

Interviewee A1

"*In my opinion banks are not doing enough in terms of aligning their goals with their customers. Prohibitive interest rates on loans are not in tandem with what is happening on the ground, banks must identify new products that are accessible to the majority of the banking population".*

Interviewee B3

"There are so many socio-economic issues that can be addressed by banks, surely these banks are making super profits when other businesses are suffering, I do not see why they fail to do simple things like sinking boreholes in disadvantaged communities, people will know they value their customers' needs and, in a way, it can motivate people to do more banking".

Interviewee D4

"If you have been following what is happening in the country, you will be aware that people are having their houses auctioned by banks for failure to pay agreed instalments and sometimes these houses are auctioned for next to nothing. Banks should do due diligence before they recklessly lend money especially if you consider the suppressed economic activities, most people will most likely be unable to afford the repayments. Can you convince someone that this bank has the customer's best interests – there is no shared values there?"

Other interviewees, although only a few, believed it was not necessary to consider issues like shared values in such a volatile economic environment implying that they did not expect much from their banks in terms of value alignment. For example, interviewees D1 and A3 stated the following:

Interviewee D1

"I think every business is focusing on staying afloat and that includes banks, frankly speaking very few businesses are thinking about value alignment in this volatile economic environment".

Interviewee A3

"*Thinking of issues like value alignment in these challenging times is stretching it. How can one expect banks to go further and offer extras when they are challenged in providing the minimal expected services like simply giving a customer cash on demand?"*

Based on the interviewees' comments, it can be concluded that the majority of the interviewees believe banks can do more in terms of aligning their values with those of their customers. There is also an expectation that banks should become more innovative in creating products/services that are more aligned to the customers' current needs. However, a few of the interviewees believed issues like value alignment should not be of great concern in the current environment, instead bank customers must simply expect the basic services. As stated earlier on, this is another clear indication of the low customer expectations currently prevailing in the banking industry, a clear sign of the deterioration of services which must drive relevant stakeholders to correcting such perceptions.

5.10.2.8 Bank trustworthiness and customer commitment

It was established from the quantitative findings that trustworthiness of banks has a positive influence on customers' commitment. The researcher sought to gauge the levels of commitment towards banks considering all the documented challenges in the banking sector. Findings from the qualitative phase indicate that there is still a high level of commitment to banks for various reasons. For example, Interviewees A1, A4, D1 and C1 below stated the following:

Interviewee A1

"In my opinion, the greatest things about my bank is its resilience, it keeps evolving and despite all the challenges, it is the only bank that I can commit to. Surely things will get right and we will get back to good old times where we used to get loans without any hassles".

Interviewee A4

"Even though I am not happy with everything my bank does, I will stay committed to it because it has stood the test of time compared to most of the indigenous banks that closed and left their customers in poverty. I believe what is happening in the country is a phase and good times will come again".

Interviewee D1

"I am committed to my bank 100 percent, it gives me quality products and quality services, besides, and my choices are limited for now. My bank has withstood most of the challenges that resulted in a number of bank closures".

Interviewee C1

"I am totally committed to my bank and as long as I am still residing in Zimbabwe, my current bank will always be my bank of choice".

However, some interviewees were adamant that they were not committed to their banks because of various reasons as stated by Interviewees A2, B4 and C2 below:

Interviewee A2

''You cannot commit to anything in Zimbabwe, not even to banks because everything changes without notice. For one to commit there must be certainty which is what is generally lacking in Zimbabwe I believe that in the future, I am likely to change my bank if things do not improve".

Interviewee B4

"*You can only commit to a bank that you trust and a bank that is committed to you. Just like in a marriage, if one party is not trustworthy then the marriage is likely not to last. This is exactly how I feel about my bank, I am not committed because I felt undervalued by my bank presumably because I do not have a fat balance account".*

Interviewee C2

"Sometimes we are committed to banks not because they are trustworthy but because our choices are limited, given a choice, I would surely move to one of the internationally owned banks, they seem to be better. Right now, I am just worried about changing my salary details because I am a civil servant and the process can be cumbersome".

It was evident from the participants' responses that a significant number still had an emotional attachment to their banks which was mostly based on the previous good experience. The continued attachment, despite all the challenges, can also be an indication that the participants do not totally blame their banks for the current lack of trust in the banking sector, but found other mitigating factors like the uncertainty in the economy and government interference. However, it is also evident that some of the interviewees had intentions to move to other banks, particularly foreign owned banks as they were not satisfied with the current services from their respective banks.

5.10.2.9 Bank trustworthiness and customer's behavioural intentions

The quantitative results found support in the positive impact of organisational trustworthiness on behavioural intentions. The researcher wanted to establish whether bank customers were likely to exhibit positive behavioural intentions based on their current trust levels in their

respective banks and their reasons for doing or not doing so. Some interviewees expressed willingness to recommend their banks to other potential customers as well as trying new products offered by their banks (an indication of positive behavioural intentions) for various reasons as stated below:

Interviewee A1

"I will definitely recommend my bank and speak positively about it, most people in Zimbabwe own houses because my bank is the largest provider of housing loans in Zimbabwe. I think you will agree with me that you can never forget a bank that has helped you buy a house, so despite all the hurdles, I am very grateful".

Interviewee D4

"Personally, a foreign-owned bank is safer than locally owned banks, my bank is solid because it has an international footprint and will gladly recommend it".

However, other participants were not very keen to recommend their banks, an indication of negative behavioural intentions. For example, Interviewees B2 and CI stated the following:

Interviewee B2

"*For me all banks in Zimbabwe are challenged; they are all giving services that is below standard whether by design or not, but it would be very naïve for me to tell someone to try a new bank now, not unless the economic environment changes".*

Interviewee C1

"For now, people must just have a maintenance mode, not a good time to recommend a new bank or for me to try a new bank. Besides my bank has been featuring in the newspapers recently for the wrong reasons and surely no one wants to go to a bank like that".

Based on qualitative findings, it can be concluded that a significant number of bank customers still exhibit positive behavioural intentions towards their respective banks despite all the current challenges, in the banking sector. This could be an indication of good previous experiences as well as a notion that banks are not to blame for the current poor services. The findings revealed that there is also a tendency of wanting to maintain the status quo until the banking sector is stable again. This could be because all banks are experiencing challenges even if the challenges are at different levels. However, a few bank customers were not happy with their current banks and these customers indicated that they are unlikely going to be

committed to the banks as there is a clear preference of foreign owned banks. Furthermore, these customers are likely to spread negative WOM which might further erode bank trustworthiness.

The key findings of the qualitative analysis are:

- Bank customers mostly blame the RBZ for the lack of trust and confidence in the banking sector (poor structural assurance), thus there is better levels of trust in banks than in the RBZ.
- Government interference in the operations of the banking sector is negatively affecting the Zimbabwean banking sector and contributing to the deterioration of trust and confidence.
- There is a general belief that banks are exhibiting untrustworthy behaviours, mostly due to circumstances beyond their control, such as poor policies and supervision from the RBZ, a volatile economic environment and political interference through the government.
- Foreign-owned banks are more trustworthy than the locally-owned banks.
- Cash shortages have the most negative influence on bank customers' confidence and trust in the banking sector.
- There is general tendency to rely more on informal communication (the grapevine) rather than formal communication.
- A significant number of bank customers are still emotionally attached to their banks despite the current challenges in the banking sector as evidenced by their willingness to stay with their banks and positive behavioural intentions.

5.11 CHAPTER SUMMARY

Chapter 5 presented the study results from the two phases of the sequential explanatory research method adopted for this study. The first phase (quantitative phase) was the main part of the research and it focused on the response rate analysis, socio-demographic characteristics of the respondents, reliability analysis, validity analysis, descriptive statistics, inferential statistics, SEM to test the research hypotheses. The second qualitative phase provided insights that helped to understand and interpret the quantitative results. Thus, the follow-up interviews were very helpful in shedding more light on the trustworthiness perceptions of bank customers in Zimbabwe towards their respective banks as well as their holistic view of the banking Industry. Chapter 6 integrates and discusses both the findings from the quantitative results and qualitative results.

CHAPTER 6: DISCUSSION OF RESEARCH RESULTS AND FINDINGS

6.1 INTRODUCTION

Research findings were presented in the previous chapter. A discussion of the key findings from both the quantitative phase and the qualitative phase is done in this chapter. The main areas of discussion are linked to research objectives and related hypotheses, study variables and influences of socio-demographic factors on the study variables. The results of the present study are interpreted in view of the findings in prior studies; thus, this chapter seeks to synthesise the literature with the study's empirical findings. The primary objective of this study was to investigate trustworthiness dimensions of banks that drives consumer trust in a banking sector that is experiencing a confidence crisis. The specific objectives were:

- To determine trustworthiness factors that can be regarded as having the strongest influence on the decision to trust a bank by its customers;
- To examine the influence of bank trustworthiness on behavioural intention of its customers;
- To examine the influence of bank trustworthiness on affective commitment of bank customers; and
- To examine the influence of affective commitment on behavioural intentions on the part of the bank customers (a prediction).

6.2 DATA TRANSFORMATION

The results presented in the previous chapter relate to both the quantitative phase and qualitative phase of the sequential explanatory mixed-methods approach adopted for this study. The results from quantitative data collection were used to inform the qualitative data as illustrated below in Figure 6.1

Figure 6.1: Integration of results

The purpose of this approach was to use the qualitative analysis to assist in interpreting the quantitative results; in other words, the qualitative findings clarified the findings of the quantitative phase by bringing to light the basis of bank customers' trustworthiness perceptions towards their banks. Thus, the data collection methods complemented each other

resulting in an enriched understanding of trustworthiness factors affecting the Zimbabwean banking sector and how these factors influence bank customers' affective commitment and behavioural intentions towards their banks.

6.3 RESEARCH HYPOTHESES (ANTECEDENTS OF TRUSTWORTHINESS)

The first study objective was to determine trustworthiness factors (antecedents of trustworthiness) that can be regarded as having the strongest influence on the decision to trust a bank by its customers. Six hypotheses were formulated to answer this research question.

6.3.1 Influence of Competence on Organisational Trustworthiness

It was hypothesised that ***H_1: Competence has a positive influence on organisational trustworthiness***

The hypothesis sought to examine the relationship between trustworthiness and competence. Competence is often linked to the ability of an organisation to deliver on its promises (Donney and Cannon, 1997). A significant number of studies prevalent in literature confirmed the importance of competence in influencing trustworthiness perceptions for example, Caldwell and Clapham (2003) concluded that ability and skills, competencies and expertise were as the key elements of trustworthiness. Similarly, Bews and Rossouw (2002) found openness, integrity, benevolence, and competency as the dimensions of trustworthiness in insurance service provider. From a services industry perspective, Kharouf *et al.* (2014) and Ennew and Sekhon (2007) found empirical evidence of the significant influence of competence on organisational trustworthiness.

However, this widely-accepted relationship between competence and trustworthiness was not confirmed in this study as there was insignificant positive correlation between competence and trustworthiness and hence, the hypothesis was not supported. This unexpected finding was clarified by the findings from the qualitative phase whereby a significant number of bank customers stated that banks were regarded as incompetent in most instances, mainly because their ability to provide the expected services is hampered by circumstances beyond their control. These circumstances include poor policies in the banking industry as well as the prevailing unpredictable economic and political environment in the country. This implies that the majority of bank customers do not blame their banks for the slack in services currently experienced in the banking sector and as such, bank competence is not questionable due to these mitigating factors. Another explanation that emerged from the qualitative study is that the majority of the banks under study have been operational for a significant period of time

and have previously been able to deliver and at times exceed the expected service. Thus, because of these positive previous experiences, customers do not entirely blame their banks for the current poor service. Instead, they blame poor governance in the banking sector as well as economic and political instability.

None the less, banks are not expected to make excuses on the basis of the perceived challenges in the banking sector and fail to put in the required effort in order to satisfactorily service their customers. Customers still expect banks to have knowledge not only about their products and services, but to also knowledge of developments in the industry particularly in environments of low trust levels. Even in these challenging economic environments, there are still opportunities for banks to develop products that are relevant to the customers' current needs as a way of demonstrating their competence while also demonstrating that they care about their customers' welfare. Competence of a service provider has been found to significantly influence organisational trustworthiness in previous studies as stated above and hence, the importance of competence despite the negative correlation established in this study.

The study findings contradict findings from the majority of previous studies; for example, Kharouf *et al.* (2014); Kharouf (2010), Roy *et al.* (2011); Mayer *et al.* (1995) and Ennew and Sekhon (2007), who all found support for the positive influence competence has on trustworthiness/trust. However, the study confirms the findings by Sandada and Magobeya (2016) who also determined that bank competence does not influence trust in Zimbabwe banks. Furthermore, Edelman (2015) revealed that providing service excellence in services and products does not necessarily result in boosting customer confidence but may, instead, result in customers developing higher service and products expectations.

6.3.2 Influence of Integrity (Consistency) on Organisational Trustworthiness

It was also hypothesised that, ***H_2*: *Integrity (Consistency) has a positive influence on organisational trustworthiness***

The findings confirmed a significant positive relationship between integrity (consistency) and bank trustworthiness. In fact, this construct was found to be the trustworthiness determinant with the third highest influence on bank trustworthiness. Integrity implies that the trustee will uphold a set of principles and values acceptable to the trustor (McKnight and Chervany 2001). Ennew and Sekhon (2007) describe integrity as "The extent to which a service provider is

honest and consistent in what it does from a customer perspective". McKnight *et al.* (1998) suggest that a trustor forms trustworthiness perceptions based on the predictability (consistency) of the trustee's behaviour. This implies that customers tend to trust banks that display high level of fairness, keep their promises and offer consistent services. Integrity which also implies that one has consistency is particularly relevant in this study context where the banking sector is marred by many challenges in the provision of their services, and sometimes, banks are found in situations where customers regard them as practising favouritism due to limited resources; for example, the prevailing cash shortages currently experienced in Zimbabwe. In such circumstances, banks must be fair in how they allocate the limited cash in order to maintain their integrity and to some extent maintain a certain level of consistency.

Research also suggests that integrity is essential in fostering overall trust since it aids exchange partners to predict future behaviours under uncertain environments (Doney and Cannon, 1997). Furthermore, Xie and Peng (2009) concluded that the integrity an organisation holds is vital in rebuilding trustworthiness especially after negative publicity that damages customers' perceptions of the company image. Thus, if a bank is consistent and fair in the delivery of its obligations to its customers, it will assist in reducing uncertainty and in mitigating the customer's perceived risk leading to favourable bank trustworthiness perceptions. Further, consistency is regarded by customers as a measure of stability (Butler and Cantrell, 1984). Stability is a crucial factor in influencing confidence in the Zimbabwean banking industry where several banks were closed for various reasons leaving many bank customers in financial despair.

Findings from the qualitative analysis indicated positive perceptions on banks' integrity and consistency despite all the prevailing challenges in the banking sector. This is mainly due to the belief that the challenging economic environment currently prevailing in the banking sector has resulted in banks displaying inconsistencies that may be perceived as lack of integrity not by choice but by circumstances that were mostly beyond their control. Additionally, some bank customers indicated that their previous good experiences with their respective banks when the banking sector was still stable reinforced their beliefs that the current perceived lack of integrity and consistency by banks is not deliberate. This view is also supported by other studies that concluded that trust is belief-based and it develops over a period of time as a result of repeated experiences (Büttner and Göritz, 2008; Caldwell and Clapham, 2003).

The study findings on the importance of integrity and consistency in building a trustworthy image is supported by findings from previous studies: (Ennew and Sekhon, 2007; Heffernan *et al.,* 2008; Roy *et al.,* 2011; Kharouf *et al.*, 2014; Mayer *et al.,* 1995).

6.3.3 Influence of Benevolence on Organisational Trustworthiness

It was also hypothesised that ***H_3: Benevolence has a positive influence on organisational trustworthiness.***

The hypothesis was concerned with establishing the relationship between benevolence and bank trustworthiness. Benevolence was taken from the model since its inclusion resulted in the model being a poor fit. Thus, the hypothesis was not tested. However, in previous studies that include (Ennew and Sekhon, 2007; Kharouf, 2010), benevolence was found to influence trustworthiness significantly and the researcher is, therefore, of the view that it still warrants further discussion in this study. Benevolence is based on the trustee's willingness to establish mutually fulfilling interactions, instead of being driven by the desire to maximise profits and it is more conspicuous when a bank has the choice to behave opportunistically and elects not to do so. Thus, the avoidance of this opportunistic behaviour is an act of benevolence (Mayer *et al.*, 1995).

Findings from the qualitative analysis revealed that some customers believe banks are acting in an opportunistic manner; for example, in cases where they lend recklessly without proper credit assessment, only to recover the outstanding debts through auctioning the borrower's residential properties, which would have been used as collateral security in the event that the customer fails to service the loan. Thus, banks should still take benevolence concerns towards their customers seriously in order to earn customers' trust by showing a caring attitude towards customers' needs and by acting in the best interests of the customers instead of being motivated by profits only. Benevolence has been found to positively influence trustworthiness by Ennew and Sekhon (2007); Kharouf *et al.* (2014); Mayer *et al.* (1995) and McKnight *et al.* (1998). However, other studies failed to establish a positive influence of benevolence on trust in their studies: (Jarvenpaa, Tractinsky and Vitalec, 2000; Mayer and Gavin, 2005).

6.3.4 Influence of Value Alignment on Organisational Trustworthiness

It was also hypothesised that: ***H_4: Value alignment has a positive influence on organisational trustworthiness***.

The fourth hypothesis sought to establish the relationship between value alignment and bank trustworthiness. Findings from the quantitative study confirmed a positive relationship between value alignment and trustworthiness, and this construct exhibited the highest positive correlation with trustworthiness among the trustworthiness determinants. The perceived similarity (shared values) creates a feeling of confidence in the partner organisation (Gill *et al.*,

2006), and it through the high confidence levels in an organisation (bank) that customers will have increased positive perceptions of trust and reliability (Coulter and Coulter, 2003).

Unlike other constructs that were adopted in this study as significant in influencing trustworthiness perceptions, value alignment presented challenges. This is mainly because value alignment involves the alignment of an organisation's behaviours, attitudes and at times ethical issues with those of their customers (Kharouf, 2010). In this 21st era, customers are expecting more than basic services from their service providers; they expect a service provider to recognise and incorporate their values in their business strategies. Issues regarding environmental concerns and the service provider's impact on socio-economic development in surrounding communities are some of the issues that customers consider as shared values. As stated above, value alignment can be challenging and banks may find it difficult to satisfy every customer as different customers value different things based on their culture, religion or race. However, there are still basics that banks can do; for example, issues that involve uplifting disadvantaged communities are likely to resonate with the majority of bank customers.

Findings from the qualitative analysis also confirmed the importance of value alignment in creating trustworthiness perceptions and the majority of respondents stated that banks could do more in terms of aligning their values with those of their customers especially in situations of economic challenges. One of the suggestions provided in the qualitative phase was sinking boreholes in disadvantaged communities to ease the current water crisis facing communities across Zimbabwe. The significance of value alignment in influencing trustworthiness of a service provider was also demonstrated in findings by Nienaber *et al.* (2015); Kharouf *et al.* (2014); Hurley *et al.* (2014); Roy *et al*. (2011); Mayer and Davis (1999) and Morgan and Hunt (1994).

6.3.5 Influence of Communication on Organisational Trustworthiness

It was hypothesised that ***H_5: Communication has a positive influence on organisational trustworthiness.***

The fifth hypothesis sought to establish the relationship between communication and trustworthiness. The survey findings revealed an unexpected finding, it was revealed that communication does not have a positive influence on bank trustworthiness. Instead, it was established that there is an insignificant negative influence of communication on organisational trustworthiness yet, the frequency and intensity of communication were found

to increase mutual trust, and to facilitate resolution of disputes and misunderstandings in previous studies (Mukherjee and Nath, 2003; Smith and Barclay, 1997).

One would have expected communication to positively influence bank trustworthiness especially during a period of low trust levels since communication plays an important role as a tool to inform customers of developments in the sector as well as clarifying ambiguous issues This view is also supported by Anderson and Narus (1990) who concluded that communication is pivotal in facilitating resolution of disputes as well as creating future trustworthiness perceptions and expectations (Dwyer *et al.*, 1987). In addition, honest communication was also found to facilitate better management of expectations in the financial sector (Kingshott, 2006).

The quantitative findings of the study also indicated that the two items in the communication construct 'My bank communicates regularly' and 'My bank informs me of new developments' had the highest negative influence on this construct. Thus, bank customers in Zimbabwe expect regular communication and prompt updates on key developments in the banking sector, especially if one takes into consideration the current volatile economic environment prevailing in Zimbabwe. Furthermore, bank customers prefer open and honest communication, suggesting that service providers must avoid ambiguity in their communication as this increases anxiety which further negatively affect trust levels.

Findings from the qualitative analysis clarified findings of the quantitative phase as most of the interview participants stated that communication emanating from both their respective banks and the central bank (RBZ) was poor and not reliable. In the context of this study and based on the qualitative findings, it can be concluded that the reason why communication was found to negatively influence bank trustworthiness was that a significant number of bank customers no longer believed in the integrity of the formal communication taking place in the banking sector. Instead, there was a tendency to rely more on informal communication. This could be because of past experiences; for example, there were instances when bank customers were assured that the banking sector was safe and sound, only to experience bank closures without warning and within the same period of reassurance. This view is also supported by the comments of the chief executive officer of the CCZ, Siyachitema (2014), who stated that the RBZ was short-changing bank customers in Zimbabwe, as the central bank was failing to notify depositors of imminent bank closures. This is an example of how the failure by the RBZ to provide factual information timeously on the state of affairs in the banking sector has led many bank customers to be more reliant on informal communication.

Although other studies investigating the influence of communication on trustworthiness concluded that it was non-significant (Nienaber *et al.,* 2014; Deb and Chavali, 2010; Mukherjee

and Nath 2003), this study has brought to light the higher significance of communication in an environment of low trust levels in that if communication is not handled well, results in a negative correlation with bank trustworthiness which can potentially further erode trust if it is not timeously corrected. However, contrary to the study findings, the majority of studies confirmed the positive relationship between communication and trustworthiness (Anderson and Narus, 1990; Dwyer *et al.*, 1987; Grönroos, 2000; Hurley *et al.,* 2014; Kharouf *et al*., 2014; Morgan and Hunt, 1994).

6.3.6 Influence of Structural Assurance on Organisational Trustworthiness

It was also hypothesised that ***H_6: Structural Assurance has a positive influence on organisational trustworthiness***

The sixth hypothesis sought to establish the relationship between structural assurance and trustworthiness. Findings from the quantitative study confirmed a significant positive relationship between these two constructs. In fact, structural assurance was found to have the second highest influence on trustworthiness among the trustworthiness determinants. The issue of control and regulation is likely to be of increased importance in the financial services sector, because of the perceived high risk involved (Ennew and Sekhon, 2007). Thus, most customers value the security provided by structural assurance in such industries. Contractual agreements often include structural assurance, which summarise “legal, governmental, contractual and (other) regulatory structures that create an environment that feels safe and secure to participants” (McKnight *et al.*, 2002:304). However, “such rules will only be adhered to where there is also a strong regulator able to operate and enforce a level of sanctions that penalises failure and deviance” (Nienaber *et al.*, 2014:378). This suggest that bank customers, particularly in developing countries like Zimbabwe, mostly rely on the intervention of Government or central banks for protection and when customers lack confidence in a bank regulatory system, banks will also find it challenging to create a perception of trustworthiness that will in turn positively influence customers trust.

Structural assurance is a construct of interest in this study in that, even though it has a direct influence on bank trustworthiness, it is to a greater extent, mostly a function of the regulatory authorities (central banks) who are supposed to implement sound policies across the banking sector in order to ensure strong structural assurance. Regulatory systems are designed to boost confidence of consumers by guaranteeing safety and efficiency of the exchanges within a financial system (Gillespie and Hurley 2013). Thus, lack of structural assurance in a banking sector can be viewed as a clear indication that the regulatory authorities are lacking in their bank supervision responsibilities. In the context of this study, the persistent bank closures

between the period 1994 to 2015 was taken by many bank customers as a sign that there is poor structural assurance in the banking sector. For bank customers, the argument is simple: if there had been sound structural assurances, not so many banks would have collapsed leaving many bank customers in financial despair.

Nienaber *et al.* (2014) concluded that customers' perceptions of an organisation's compliance and conformity with the laws and regulations is important in restoring trust and confidence in the financial sector. Thus, customers also expect service providers like banks to comply with industry rules and regulations. Interestingly though, of the four statements used to assess the level of structural assurance in the quantitative phase, only one statement "*bank complies with legal framework"* was rated in the positive, whereas the remaining three statements directly linked to the regulatory policies including the statement "*legal framework protects the depositor*" were all rated in the negative. This clearly suggests that the majority of bank customers in Zimbabwe believe that their banks comply with legal frameworks; however, they do not believe that there are sound and adequate legal frameworks in the banking sector.

Findings from the qualitative analysis overwhelmingly supported the findings from the quantitative analysis in the significant influence of structural assurance on bank trustworthiness. Most participants stated that poor policies and lack of supervision by the central bank (RBZ) and the meddling of the government in the affairs of the RBZ are the major factors causing deterioration of bank customers' trust and confidence in the banking sector more than the actions of the banks. Findings of this study therefore confirm that regulations (structural assurances) are critical in restoring trustworthiness, not just in banks but in the whole financial sector through enhancing confidence and reducing perceived vulnerability of consumers. The significant influence of structural assurance on trustworthiness was also confirmed by prior studies (Nienaber *et al.,* 2014; Sandada and Magobeya, 2016).

6.4 RESEARCH HYPOTHESES (OUTCOMES OF TRUSTWORTHINESS)

6.4.1 Influence of Organisational Trustworthiness on Behavioural Intentions

The second study objective was to examine the influence of bank trustworthiness on behavioural intentions of its customers. Therefore, it was hypothesised that:

H_7: Organisational trustworthiness has a positive influence on behavioural intentions.

Findings from the study confirmed that trustworthiness is positively correlated with behavioural intentions. Favourable behavioural intentions are regarded as good indicators of a customer's

intention to develop a lasting relationship with a service provider (Wilson *et al.,* 2012). However, Gillespie (2012) states that, even though customers may perceive an organisation as trustworthy, it does not automatically follow that they would actually engage in trusting behaviour towards that organisation. Thus, in this study, it was important to ascertain if bank trustworthiness led to favourable behavioural intentions by customers towards their respective banks.

Customers can only have favourable behavioural towards an organisation if they perceive the organisation as trustworthy. These positive behavioural intentions are reflected in a customer's intention to spread positive WOM, willingness to recommend company products and services to other potential users and intentions to repeat purchases from a particular service provider and purchasing more products/services (Ozdemir and Hewett, 2010). It is also important to note that behavioural intentions can also be negative and consequently cause damage to an organisation's brand (Zeithaml *et al.,* 1996). Thus, banks must embrace all antecedents of trustworthiness in order to be perceived as being trustworthy; this will, in turn, result in favourable behavioural intentions that enhance customer recruitment and retention.

Findings from both the quantitative and qualitative analysis indicated that customers who believed their banks were trustworthy; for example, Bank D customers also indicated that they were willing to recommend the bank to potential customers and try new products offered by the bank, an indication of positive behavioural intentions. The positive relationship between trustworthiness and behavioural intentions was also confirmed by Wilson *et al.* (2012), Podnar and Javernik (2012) and Ozdemir and Hewett (2010).

6.4.2 Influence of Bank Organisational Trustworthiness on Affective Commitment

The third study objective was to examine the influence of bank trustworthiness on affective commitment. Therefore, it was hypothesised that:

H_8: Organisational trustworthiness has a positive influence on affective commitment.

Findings from the study confirmed that trustworthiness is significantly positively correlated with affective commitment. In fact, the relationship between organisational trustworthiness and affective commitment had the highest correlations when all the constructs are considered. Organisations develop trust to gain commitment from customers (Doney and Cannon, 1997; Morgan and Hunt, 1994). Commitment is described "a desire to develop a stable relationship, a willingness to make short-term sacrifices to maintain the relationship, a confidence in the

stability of the relationship, and investments in the relationship" (Anderson and Weitz, 1992:19).The current study focuses on affective commitment dimension because there is empirical evidence that it has a positive influence on permanent behaviours (Jin, Lee and Cheung, 2010; Wang and Datta, 2006). Effectively, affective commitment is the strong psychological connections customers have with an organisation which validates their reasons for wanting to stay loyal to the organisation (Snyder and Cistulli 2011). However, customers can only develop these strong psychological connections with an organisation which translate to affective commitment if they believe the organisation is trustworthy. Therefore, it is imperative that banks portray a trustworthy image in order to gain committed customers.

There is also evidence in literature to suggest that loyal customers are committed customers and are more forgiving when compared to non-loyal customers (Berkowitz, 2016). In the context of this study, committed customers are critical in the sustainability of banks considering the low levels of trust in the banking sector which undermines the banks' ability to recruit and retain customers. Moreover, committed bank customers are more likely to remain loyal to their banks and look past the current challenges in the banking sector with the hope of better services in the future.

Findings from both the quantitative and qualitative phases of the study revealed that bank customers who do not perceive their banks as trustworthy were more likely not going to stay committed to their banks. For example, customers from Bank C exhibited the lowest trustworthiness perceptions towards their bank and they also indicated that they were likely to move to another bank. The opposite is also true for customers from Bank D, who exhibited the highest trustworthiness perceptions towards their bank and indicated that they would most likely stay committed to the bank. The positive relationship between trustworthiness and affective commitment is also supported in the literature (Colquitt, Scott and LePine, 2007; Gruen *et al.*, 2000).

6.4.3 Influence of Affective Commitment on Behavioural Intentions

The fourth objective was to examine the influence of affective commitment on behavioural intentions. The conceptual model suggested a prediction between affective commitment and behavioural intentions. Therefore, it was hypothesised that:

***H_9:* Affective commitment has a positive influence on behavioural intentions.**

Findings from the study indicated that affective commitment is positively correlated with and leads to positive behavioural intentions. The findings suggest that if customers perceive an organisation as being trustworthy, they will commit to the organisation and exhibit positive

behavioural intentions towards the organisation. Committed customers also enhance the marketing activities of an organisation through spreading positive WOM (positive behavioural intentions) about the organisation which is regarded as a powerful marketing tool (Podnar and Javernik, 2012). In the context of this study, positive behavioural intentions emanating from customers who are affectively committed to their bank can be a source of competitive advantage that facilitates recruitment of new customers for the bank. This statement found support in the study findings where the majority of customers from Bank D exhibited high affective commitment levels to their bank and expressed their willingness to recommend the bank to potential customers. The qualitative findings also indicated that the majority of the participants from Bank D spoke positively about their bank and were eager to recommend it and to stay committed to the bank.

The study findings on the positive influence of affective commitment on behavioural intentions were also confirmed in studies by (Jin, Lee and Cheung, 2010; Wang and Datta, 2006).

6.5 INFLUENCE OF SOCIO-DEMOGRAPHICS ON STUDY VARIABLES

As explained by Kotler, Keller, Brady, Goodman and Hansen (2009) and Du Plessis, Rousseau, Boshoff, Ehlers, Engelbrecht, Joubert and Saunders (2007), an analysis of the socio-demographic factors is essential in consumer behaviour studies as the findings will provide important information that can be used by marketers in their marketing initiatives. For example, an understanding of these socio-demographic factors and their influence on each other as well as their influence on study variables will better equip marketers in developing more informed strategies on how to segment and target their markets. Findings from this study indicated that there were statistically significant differences among bank customers' trustworthiness perceptions, behavioural intentions and commitment based on age, bank used, formal educational level and gender. However, the banking period had no influence on the assessment of banks by respondents; thus, it was found to have no significance in how customers rated the banks.

6.5.1 Influence of Age on Study Variables

Findings from the study indicated that age has a significant influence on commitment and behavioural intentions of bank customers in Zimbabwe. The study findings revealed that older customers tended to trust their banks more and were more committed to their banks compared to the younger age groups. Furthermore, older customers exhibited higher positive behavioural intentions towards their banks compared to other age groups. A possible

explanation could that these customers have previous good experiences with their banks and these good experiences are the basis of their current positive perceptions towards their banks.

6.5.2 Influence of Gender on Study Variables

The study findings provided significant evidence that not only does the level of consistency between men and women differ in their banks' trustworthiness perceptions on issues of communication and structural assurance (men being more consistent), but the extent of the mean levels of trustworthiness is influenced significantly by gender. Thus, in Zimbabwe male bank customers are more inclined to trusting their banks compared to their female counterparts.

6.5.3 Influence of Educational Level on Study Variables

The study findings indicated that, generally, the level of formal qualification has no significant effect on perceptions of organisational trustworthiness. However, what is clear is that there is an inclination by respondents with doctorates towards exhibiting higher levels of positive behavioural intentions towards their banks. This could be that bank customers with doctorates are likely to be high net worth customers who enjoy privileged banking services; hence, their positive attitude towards their banks could be enhanced by better services and as such, they are likely to exhibit positive behavioural intentions.

6.5.4 Influence of Bank used on Study Variables

Findings from the study confirmed a significant association between bank used and the level of trustworthiness, affective commitment and behavioural intentions. This implies that in Zimbabwe, bank affiliation is a possible factor that drives customers trust in a banking sector. The majority of Bank D customers appear to exhibit trust at a higher level and Bank C customers exhibited the lowest customers trust levels compared to the other banks. The high level of trust in Bank D can be attributed to the bank being a foreign-owned bank that is perceived as being more secure than locally-owned banks. In the case of Bank C, it could be that it is a locally-owned bank and is associated with the stigma still affecting indigenous banks in Zimbabwe due to several closures of indigenous banks for various reasons during the period from 1994-2015.

6.5.5 Influence of Number of Years with a Bank on Study Variables

Findings from the study indicated that the banking period had no influence on the assessment of banks by respondents. This could be attributed to the fact that the majority of bank

customers are generally fed up with the challenges they are facing in accessing bank products and services. As such, the period one has been with the bank no longer provides any incentives that warrant better appraisals of banks by customers.

6.6 CHAPTER SUMMARY

The study findings were holistically discussed by linking them to the research objectives and hypotheses. Findings from the quantitative and qualitative findings were integrated and discussed in relation to each study hypothesis by interpreting and relating the findings to other findings found in the literature reviewed. Findings from the study found support for the majority of the hypotheses developed for this study except for competence and communication while benevolence was dropped from the proposed final model since its inclusion resulted in the model being a poor fit. The qualitative analysis played a very important role in this study as it brought to light many issues revealed in the quantitative results that otherwise would still be puzzling, for example, the reasons behind the negative correlation between communication and organisational trustworthiness which was an unexpected finding. The following chapter being the last chapter presents the conclusions, study implications, study limitations and recommendations to various stakeholders in the banking sector.

CHAPTER 7: CONCLUSION AND IMPLICATIONS

7.1 INTRODUCTION

Following on from the previous chapter where the study results were integrated and fully discussed, this chapter is the final chapter of the thesis and it focuses on providing conclusions and lessons learnt from the study. Therefore, the chapter will start by summarising the study key findings and highlighting the study contribution by discussing the study implications on theory and practice as well as providing recommendations to key stakeholders. The chapter will also elaborate on the study limitations and recommendations to guide future research will be provided.

7.2 SUMMARY OF QUATITATIVE RESULTS AND QUALITATIVE FINDINGS

The researcher's investigation into trustworthiness of banks and the resultant relational outcomes in the Zimbabwean banking sector provided a novel analysis into consumer behaviour in a developing country that is characterised by low levels of trust, a volatile economic and political environment. It also provided findings which the researcher considers to be a significant contribution based on the identified gaps in bank marketing literature. The main objective of the study was to identify trustworthiness dimensions that are considered as having the strongest influence on the decision by bank customers to trust a bank. The study also investigated how the perceived bank trustworthiness influences customers' affective commitment and behavioural intentions towards banks. Furthermore, the study also sought to establish the predicated relationship between behavioural intentions and affective commitment. Based on the in-depth discussions of the study findings in Chapter 6, the main findings of the study can be summarised as:

1. Fiscal and monetary policy misalignment emanating from both the government and the central bank (RBZ) appear to be the key determinants to responses from study participants more than inherent bank specific variables in the qualitative phase of the study. The majority of the participants in the qualitative phase tended to blame the RBZ and the government for most of the issues affecting trust and confidence in the Zimbabwean banking sector.

2. The initial conceptual model proposed nine hypotheses; each hypothesis was linked to a construct in the conceptualised model. Benevolence was taken from the final model since its inclusion resulted in the model being a poor fit. Thus, hypothesis 3 relating to

benevolence was not tested. The path analysis clearly defined the relationships among the constructs, and reported the path coefficients that were used to test the study hypotheses. The overall final model fit showed that this study model has very good model fit based on the recommended model fit indices.

3. Findings from the study found support for the majority of the hypotheses developed for this study except for competence and communication while benevolence was dropped from the proposed final model since its inclusion resulted in the model being a poor fit.

4. With regard to the influence of trustworthiness determinants on organisational trustworthiness, the highest correlation was found between three proposed trustworthiness determinants: value alignment, structural assurance and integrity (consistency) in that order. The widely-accepted relationship between competence and trustworthiness was not confirmed in this study.

5. It was also established that communication has a negative correlation with trustworthiness although not significant. Communication is critical in the banking environment experiencing low confidence and trust levels like the Zimbabwean banking sector. Bank customers expect clear, honest communication as well as regular updates on key developments in the sector, this will significantly enhance their trust in banks. This study has brought to light the higher significance of communication in an environment of low trust levels in that, communication if not handled well can actually result in a negative influence on trustworthiness instead of the expected positive influence on organisational trustworthiness of a service provider.

6. In the case of outcomes of trustworthiness, there is sufficient evidence from the study findings to suggest that trustworthiness of banks is positively correlated with behavioural intentions of bank customers. This corroborates the observations by Wilson *et al.* (2012) that behavioural intentions are widely regarded as a good indicator of a consumer's intention to develop a lasting relationship with a service provider. The study findings also revealed that trustworthiness of banks has a positive influence on affective commitment of bank customers. Furthermore, the findings further suggest that affective commitment of bank customers is positively correlated with and leads to positive behavioural intentions of bank customers towards a bank as predicted.

7. Findings from the study also revealed that bank customers in Zimbabwe are more inclined to trusting foreign-owned banks than locally-owned banks as evidenced by the highest positive trustworthiness perceptions exhibited by customers from Bank D, a foreign-owned bank and the lowest trustworthiness perceptions exhibited by Bank C, a locally-owned bank. This could be attributed to the fact that none of the foreign-owned banks were closed because of poor performance or failure to comply with regulatory requirements during a period when the majority of indigenous banks were closed (1995-2015). The study also points to what is needed by indigenous banks to gain customers trust and confidence: they essentially need to mitigate perceptions of lack of stability precipitated by the closure of a significant number of the locally owned banks.

8. Another key finding is that the majority of the participants blamed poor policies emanating from an ineffective bank regulatory system and political interference for the lack of trust in the banking sector more than they blame their respective banks. The general belief is that banks are sometimes incapacitated in the delivery of services due to poor policies, poor monitoring of banks and political interference. Findings from the qualitative analysis pointed to issues that include: deregulation of the banking sector that allowed unqualified banks to operate leading to a significant number of bank closures; inconsistencies in the adoption of a currency in the country resulting in the introduction of bond notes which cannot be traded with any foreign currency; and rampant cash shortages which many believe could have been avoided if there were sound policies in the banking sector. Reckless government spending was also mentioned as one of the reasons why the banking sector was experiencing challenges.

9. As for the influence of socio-demographic factors on study variables, findings from the study indicated that there were statistically significant differences among bank customers' trustworthiness perceptions, behavioural intentions and commitment based on age, bank used, formal educational level and gender. However, the banking period had no influence on the assessment of banks by respondents as it was found to have no significance in how customers rated the banks.

10. It can also be argued in this study that bank customers in Zimbabwe have better trustworthiness perceptions towards their banks than they have towards the central bank (RBZ).

7.3 STUDY CONTRIBUTION

The findings of this study offer important insights into how trustworthiness of a service provider is regarded from a banking sector perspective. Firstly, the study has revealed the negative impact communication has if it is not properly handled in a banking sector operating in environments of low confidence and trust levels. Secondly, the study has confirmed the importance of building a trustworthy image in order for banks to be trusted by customers. Thirdly, the study has brought to light the pivotal role that structural assurance plays in improving trustworthiness perceptions. Lastly, the study validated trustworthiness as a distinct construct from trust, and that bank trustworthiness has a positive impact on affective commitment and behavioural intentions on the part of bank customers.

.

In terms of originality, the researcher is not aware of any studies readily available that address trustworthiness of banks by linking perceived bank trustworthiness dimensions (competence, integrity/consistency, value alignment, communication, structural assurance and benevolence) to two relational outcomes: affective commitment and behavioural intentions. Furthermore, this study also links affective commitment to behavioural intentions in the same conceptual framework. The study can therefore be considered as an initial, pioneering sequential explanatory mixed-methods study that explores the antecedents and implications of bank trustworthiness on customers' behavioural intentions and affective commitment in developing countries. More specifically, this study contributes to the existing body of knowledge in the trust domain by providing some empirically-tested insights in an African context in a banking sector that is experiencing low trust levels, and an uncertain economic and political environment. It is also argued that the refined final model proposed in this study can be applied in trustworthiness studies in the financial services sectors particularly in sectors that are operating in such uncertain environments.

.

7.3.1 Implication on Theory

The following are considered as theoretical implications of the study.

Firstly, existing theory suggests that trust is essentially built through exhibition of trustworthiness perceptions (Bews and Rossouw, 2002; Xie and Peng, 2009). However, there is limited empirical research that has examined the mediating role that trustworthiness plays between organisations' behaviours and customer trust. Most studies focus on conceptualising trust alone as essential in the development of successful relationships (Kharouf, 2010). Consistent with the study by Kharouf *et al. (*2014), this study conceptualises trustworthiness as an antecedent of trust. This implies that banks have to first portray a trustworthy image in

order for customers to trust an organisation. Thus, this study argues that by including trustworthiness determinants and the outcomes of trustworthiness, namely behavioural intentions and affective commitment in the proposed model, it is possible to identify the process through which organisations can build trust and how these trustworthiness perceptions influence both behavioural intentions and affective commitment. Other empirical studies in marketing literature, to date, are yet to conceptualise these relationships in a single model.

Secondly, consumer behaviour studies have largely been neglected in developing countries, particularly studies evaluating trustworthiness perceptions in a banking sector setup as most of the related studies in literature are contextualised in more developed countries (Opoku and Arkoli, 2009). This is despite empirical evidence suggesting that the national culture of a country or specific region has been shown to be important in the context of organisational trust (Zhao, Koenig-Lewis, Hammer-Lloyd and Ward, 2010). Kharouf *et al.* (2014) also argue that it is unclear how trust may differ in determinants and consequences if investigated across multiple cultures. Further, Oh and Parks (1997) suggest that there is a need to refine theories and methodologies to suit specific situations. As such, the study contributed to the existing body of knowledge in the trust domain by providing some empirically-tested insights into consumer behaviours in the banking industry from an African continent perspective.

Thirdly, while this study adopted antecedents of trustworthiness used in the majority of studies pertaining to trust and trustworthiness, it also included a construct that is not common in most trust studies, the construct of structural assurance. The inclusion of this construct was influenced by the number of bank closures in the Zimbabwean banking sector which prompted the need to investigate how this construct influences trustworthiness of banks. The findings established that structural assurance is pivotal in enhancing trust in banks through enhancing confidence and reducing perceived vulnerability between the parties. The study has therefore contributed to existing literature on the significant role of structural assurance in influencing bank trustworthiness, particularly in developing economies.

7.3.2 Implication on Research Methodology

The methodological contribution to the field of bank marketing can be seen in the constructs used in the conceptual framework. As already stated above, the study linked trustworthiness dimensions to two relational outcomes – affective commitment and behavioural intentions. Furthermore, the study also linked affective commitment to behavioural intentions in the same conceptual framework. Thus, this study did not simply focus on identifying the essential trustworthiness determinants, but also the outcomes of trustworthiness in the same research

model. Dietz and Den Hartog (2006) state that a holistic measure of trust should focus on both the respondents' trust beliefs as well as their intended actions based on their trust beliefs because simply identifying that an organisation's customers perceive it as being trustworthy does not automatically mean that the customers will act on their trustworthy beliefs (Gillespie, 2012). The inclusion of measures of the main trustworthiness determinants and the resultant affective commitment and behavioural intentions in the same study enabled the multi-dimensionality of trustworthiness of banks to be more concretely established. Therefore, findings and recommendations from the study can potentially be used by bank managers in setting up financial plans and marketing strategies that promote banking efficiency in an economic environment characterised by financial distress and low trust levels.

The present study also adopted a sequential explanatory mixed-methods approach in which both quantitative data and qualitative data were collected and analysed to explore factors that determine bank trustworthiness in Zimbabwe and the resultant relational outcomes (affective commitment and behavioural intentions). It was the researcher's view that there was a need to pursue a qualitative study in order to get more insights into the bank customers' trustworthiness perceptions towards their banks. The qualitative findings brought a lot of issues into perspective that otherwise could not have been addressed by a quantitative study alone. Therefore, the quantitative and qualitative methods complemented each other well resulting in robust research that will potentially assist bank custodians and policy makers to design informed and effective strategies and policies. Researchers of bank marketing are advised to consider the methodological implications of this sequential explanatory mixed-methods study when investigating consumer behaviours linked to trustworthiness perceptions, particularly in financial services sectors operating in similar environments.

7.3.3 Implication on Practice and Policy

The Zimbabwean economy is currently at a crossroads, where there has been a dramatic collapse in both business and consumer confidence over the past few years. If residents of a country lack trust in their government, this may result in negative support from the public sector of policies that a government implements, effectively impacting economic development in a country (Luhmann, 2000). This path, if not arrested and changed, may lead to a significant economic recession. This is the setting in which this study was done with the impact as mentioned previously that fiscal and monetary policy misalignment appear to be the key determinants in trustworthiness more than inherent bank-specific variables as indicated by the participants in the qualitative phase of the study.

Trust is regarded as a powerful RM tool that organisations can utilise to develop enduring relationships with their customers (Berry, 1995). Hence, bank custodians should realise that their attitudes and behaviours towards their customers have a great influence on how their banks are perceived as being trustworthy. Besides, banks are one of the key elements of financial development, without which developing economies such as Zimbabwe cannot progress. More so, restoring trust and confidence in the financial services sector like banks is fundamental in the wellbeing of the economy as banks play a crucial role in the functioning of the whole economy through the intermediary role they play (Gillespie and Hurley 2013). Low levels of trust may indicate serious problems in the markets and it should prompt bank managers to take corrective action (Järvinen, 2014). Thus, this study's main objective was to identify trustworthiness factors that have the highest influence on the decision to trust a bank by its customers as well as related outcomes of having a trustworthy image. Based on the aforementioned significant findings of the study, it can be argued that, looking at the Zimbabwean banking industry, key priorities that need to be worked on are:

- A pervasive lack of trust and confidence in the sector that is hurting cash inflows in the banking system resulting in a number of challenges directly affecting the banking customers and the economy at large;
- Lack of a coherent and strategic approach to solving challenges in the sector;
- An urgent need to address the liquidity crisis;
- A need for banks to continuously portray a trustworthy image in order to reignite the much needed trust and confidence;
- A need for the RBZ to be perceived as an independent financial institution that is capable of making sound financial decisions that are not mostly politically driven in order to regain consumer confidence;
- A need for both the central bank (RBZ) and banks to take charge of the communication in the sector in order to mitigate the damage arising from speculative behaviours and informal communication currently taking place in the sector; and
- A need for the central bank (RBZ) to work in tandem with banks and other key stakeholders in an effort to enhance confidence and trust in the banking sector.

The focus of this study was to create a trustworthy image which will translate to trusting a service provider. It then becomes advisable for banks to start focusing on portraying a trustworthy image by starting to develop internal marketing campaigns focussed on developing a culture of organisational trustworthiness in their organisations so that employees' attitudes are aligned with the company's strategic objective of being a trustworthy bank.

Training of staff should therefore be prioritised in order to ensure that bank employees are capable of improving the customer experience each time a customer interacts with a bank in order to improve trust levels. The following discussion relating to the study's implication on policy and practice will attempt to put into perspective how the study findings can assist the various stakeholders in regaining consumer trust and confidence taking into consideration the key priorities requiring urgent attention as highlighted above.

Findings from the study revealed that integrity (consistency) is regarded as a trustworthiness determinant with a significant influence on bank trustworthiness in Zimbabwe. This implies that it is very important for Zimbabwean banks to maintain a high degree of integrity and consistency in the delivery of their services by showing respect and paying attention to all their customer needs regardless of their status (high net worth customers or regular customers). Despite the current harsh economic environment prevailing in Zimbabwe, it has been reported that banks are still making decent profits (RBZ, 2017). To an ordinary bank customer who is struggling to access his/her hard-earned money, these bank profits may create a perception of being short-changed. Thus, banks are encouraged to always act in the best interest of the customers instead of being mostly driven by profits even in such turbulent times. This can be achieved by lowering interest rates charged by banks as well as offering competitive interests rates in order to encourage deposits inflow. While providing consistent service in environments where there are challenges like cash shortages that hinder banks from offering consistent services is difficult, banks should still find mitigating ways of solving the issue of long queues that have become a daily occurrence in Zimbabwe. It is recommended that banks plan for peak periods in terms of cash and personnel, to avoid prolonged queues and cash shortages.

Findings from the study also confirmed that value alignment significantly influences bank trustworthiness. Furthermore, findings from the qualitative analysis indicated that bank customers in Zimbabwe believe banks can do more than they are currently doing in terms of aligning their values with those of their customers. Demonstrating to customers that banks are not just motivated by profits but are also taking into consideration their customers' values when developing strategies is likely to improve bank trustworthiness. If bank custodians in Zimbabwean are to include the element of shared values in their trust repair efforts, this must be embedded in their bank mission, business model and culture. Their business strategies must articulate how they propose to take into consideration what their customers and all the other stakeholders regard as important values. In the context of this study, it is recommended that banks must be innovative in their financial offerings taking into consideration the prevailing economic hardships. Services like the provision of financial hardship advisory services and

extended loan repayment options can go a long way in not only helping their customers to manage their debt but also to show that banks are taking into consideration their customers' current needs. Exhibiting such a caring attitude is likely to mitigate the low trust levels and will resonate well with most bank customers. Consideration of ethical issues like environmental concerns and supporting disadvantaged communities especially in harsh economic environments can also enhance customer trustworthiness perceptions towards their banks. For example, banks can contribute to the government low-cost housing development plans meant for the less-privileged members of society by offering subsidised mortgage interest rates that will make housing loans affordable. Personalised banking is a tool that service providers can use to gain insights into customers' needs and expectations regarding value alignment and other bank trustworthiness determinants.

Although study findings revealed an insignificant correlation between competence and trustworthiness, banks are advised not be complacent in the provision of their services. Instead, proactive banks must utilise the current challenging banking environment to further demonstrate their ability to continuously deliver exceptional services. This view is supported by Xie and Peng (2009) who suggest that the perceived competence of an organisation assists in rebuilding trust especially after negative publicity of a service provider. In the context of this study, bank competence can be improved by continuous staff training to enable the staff members to be in a better position to meet customers' current needs. It is also imperative that bank staff members, particularly the frontline staff members, signal to customers that they have the ability and necessary skills to meet customers' current needs by having knowledge about key developments in the sector and responding to customers' queries efficiently. Bank custodians are also encouraged to develop innovative business models that target the informal sector and the diaspora market as a way of attracting funds back into the banking system which can go a long way in mitigating the current cash shortages.

The negative correlation between communication and bank trustworthiness is of great concern, especially in a banking sector that is experiencing a confidence crisis where, ordinarily, communication should be playing a significant role in restoring trust and confidence. Both the frequency and intensity of communication were found to increase mutual trust and expedite resolution of disputes (Mukherjee and Nath, 2003; Smith and Barclay, 1997). Thus, it is recommended that banks find ways of communicating effectively with their customers as a way of boosting trust in the banking sector. Communication should be regular, honest and clear. Additionally, it is recommended that communication targeting bank customers must be in the country's main languages and in an accessible mode of communication to allow bank customers to get the message first-hand. As a starting point, banks may consider the adoption

of the country's main languages in all their communication initiatives; for example, newsletters going to customers and radio announcements can be in the three main languages used in the country (Shona, English, and Ndebele) as a way of trying to reach as many bank customers as possible. South African banks are a good example of how the use of multiple languages enhances communications for example, they give customers the option to choose their language of choice on Automated Teller Machines (ATMs). Banks also have the responsibility of seeking clarification from regulatory authorities, such as the RBZ on issues that are vague instead of waiting for customers to seek clarification from them or, as indicated in the qualitative findings, waiting for customers to rely on the grapevine and speculation which can be very destructive and difficult to correct.

There is also an urgent need for the central bank to take full charge of the communication in the sector in order to mitigate the damage arising from speculative behaviours and informal communication currently taking place in the sector. The RBZ must be proactive in effectively communicating new developments in the sector through regular, honest and unambiguous communication that is readily accessible to all stakeholders. The fact that customers in the Zimbabwean banking sector are more inclined to trust informal communication should concern all the stakeholders in banking sector. Informal communication fuels speculative behaviours, for example, panic and anxiety, in the banking sector if there are rumours of an imminent bank closure which usually results in massive cash withdrawals demands which can cripple the banking system. As such, the RBZ has the responsibility to identify potentially volatile issues before they get out of hand, timeously communicate key developments taking place in the banking sector and most importantly, implement more stringent measures to protect bank consumers in the event of bank closures.

It is also evident from the study findings that there are indications of poor alignment between bank custodians and the central bank (RBZ). It could be that bank custodians criticise policies and sometimes do not agree with the effectiveness of some of the policies emanating from the central bank, resulting in poor implementation across the industry and ultimately leading to distrust in the sector. Thus, there is a need for the RBZ and other key stakeholders to share information on key developments that are integral to the smooth functioning of the banking sector. This information should then be disseminated to the banking public in one unified voice. Customer perceptions of good alignment between RBZ and the other stakeholders particularly banks are likely to enhance confidence and trust in the banking sector.

This study has brought to light the important role that structural assurance can play to erode or restore trust and consumer confidence in a conflicted banking sector. Qualitative study

findings revealed that Governance and Policy failures are regarded as the main contributors to the banking crisis which has resulted in low trust levels in the Zimbabwean banking sector. It is evident from the study findings that the majority of bank customers do not believe that there is adequate structural assurance to protect bank consumers. According to Bülbül (2013), citizens' confidence in financial institutions is critical for the long-term vitality of a nation's economy. In developed countries, consumers have many options and have confidence in the market mechanism and there is less reliance on government regulations (Asher, 1998). This is contrary to the situation in developing countries where consumers mostly rely on the government intervention for protection (Al- Ghamdi, Sohail and Al-Khaldi, 2007). However, in Zimbabwe, the situation is worsened as a significant number of bank customers are of the belief that, it is actually the government through the central bank (RBZ) that is failing the banking public due to counterproductive policies and poor bank supervision.

Accordingly, it is recommended that policy makers revisit their current policies and find new strategies to enhance their fiduciary bank regulatory duties. In this instance, the trustworthiness image should start from the top, and the bank consumers should be able to trust the central bank (RBZ) in order to enhance trust in their respective banks. The RBZ must find ways of improving its public image because, if left unattended to, the current distrust in the central bank can further erode consumer confidence in the banking sector. Their public image can only be restored if they signal trustworthiness behaviours that include early identification of troubled banks and taking appropriate measures to secure banks customers deposit in these banks. Monetary authorities should set tight corporate governance tenets that can put a plug on activities such as insider lending that end up defrauding depositors within the banks. Additionally, it is imperative that departments such as Treasury, Risk and Credit within the RBZ and in banks are manned by competent personnel that are likely to adhere to prudential standards of banking. It is widely acknowledged that in developing countries, the central bank cannot be completely independent from government activities as it is expected to conform to the needs of the national economic strategies of the government in order to boost economic development in a country (Bibow, 2010). However, it is still recommended that the RBZ ought to have a degree of independence so that it is free to plan and implement policies without the interference of the state, instead of being mostly driven by the political agenda. This is important in the current Zimbabwean banking scenario in that the continuous association of the RBZ with government failures and politics can create a challenge for the central bank in portraying a trustworthy image which is fundamental in restoring confidence in the sector. Thus, the perceived independence of the RBZ is likely going to enhance bank customers' trustworthiness perceptions.

Based on the discussions above, it therefore suffices to conclude that an inclusive approach that takes into consideration the views and expectations of all the stakeholders is likely to garner more favourable results in the trust repairing efforts rather than individualised efforts. After all, it is difficult to distinguish the problems specific to one bank from problems affecting the industry because financial distress in one bank can lead to runs on other banks. This reinforces the need for a collaborative approach in finding ways of reigniting consumer trust in the banking sector. The RBZ must devise new approaches on how to engage all the stakeholders if meaningful relationships are to be achieved that are based on trust. In framing banking sector policies, governments and central banks in such environments have to balance the distinctive priorities of promoting financial sector development, innovation, and financial inclusion; limiting risks to financial sector stability; and providing adequate protection to potentially ill-informed consumers.

Consumer trust can only be restored if there is evidence of sincere behaviour that may include: good structural assurance, effective communication, competence, integrity and alignment of values within a banking sector. Xie and Peng (2009) support this view by stating that, when organisations experience negative publicity, they can only regain their customers trust if they engage in behaviours that are regarded as reflecting a trustworthy image. It can also be concluded from the study findings that banks operating in environments of low confidence levels can gain a competitive advantage through developing strategies built on trustworthiness with the aim of achieving mutually-beneficial relational outcomes. The study findings also suggest that building trustworthiness in organisations like banks can act as a proxy for building their corporate image (Roy *et al.,* 2011).

At the time of finalising this thesis, in November 2017, there was a major development in the Zimbabwean political arena that resulted in the removal of the then sitting president, Robert Mugabe, from power by his former allies in government and in the army. The former vice president, Emmerson Mnangagwa, who had been unceremoniously fired by President Mugabe, was sworn in as the President of Zimbabwe on 24 November 2017 (Burke, 2017). With this new development, one can only hope that sanity will be brought back in the Zimbabwean economy and most importantly, that the integrity of the banking sector will be restored, for without it, consumer confidence in the sector will continue to be elusive. Most importantly, public trust and confidence in the decisions and policies made by both the government and central bank are pivotal for the overall restoration of trust in the banking sector.

7.4 STUDY LIMITATIONS

Although great care was taken by the researcher to produce a quality study that has meaningful managerial, theoretical and methodological implications, it is equally important to mention the limitations of this study. The present study only focused on trustworthiness of a service provider in a particular sector, the banking sector. This implies that the generalisation of the study findings are sector-specific. Furthermore, the study sample was drawn from customers from four banks that have a presence in the capital city Harare out of a possible 19 banks, yet bank customers in Zimbabwe are spread throughout the country. Capital city bank branches may arguably have better standards than can be found in poor districts which may result in a failure to capture a more accurate picture of customers' perceptions towards their banks.

7.5 RECOMMENDATIONS FOR FUTURE RESEARCH

It is recommended that future studies should focus on:

- Investigating trustworthiness of service providers in other sectors, for example the insurance sector and also consider taking a sample from all the banks/branches in all cities in a country;
- Investigating the commitment construct from the normative or continuance commitment perspective;
- Conducting a longitudinal study to capture changes in bank customers' trustworthiness perceptions which can result in a more accurate picture of consumers' bank trustworthiness perceptions in such environments;
- Developing a model that encompasses all the trustworthiness constructs proposed for this study in order to test all the research hypotheses. In this study, benevolence was dropped from the final model as it was affecting the overall model fit; hence, the hypothesis concerning benevolence was not tested; and
- Based on the gap in literature on the dearth of consumer studies in developing countries, conducting more studies of this nature, especially in developing and emerging economies in order to validate the findings of the present study and enhance the understanding of the concept of trustworthiness and how it impacts organisations in these economies.

REFERENCES

Aaker, D.A., Kumar, V. and Day, G.S. 2007. *Marketing research,* 9th ed., New Delhi: John Wiley and Son.

Abdul-Muhmin, A.G. 2002. 'Effects of suppliers marketing program variables on industrial buyers' relationship satisfaction and commitment', *The Journal of Business & Industrial Marketing,* 17(7): 637–651.

Alderson, W. 1965. *Dynamic marketing behavior: A functionalist theory of marketing*. Homewood: Richard D. Irwin.

Alderson, W. 1958. 'The analytical framework for marketing', in Duncan, D.J. (Ed.): *Proceedings of the Conference of Marketing Teachers from Far Western States*, Berkeley: University of California Press, 15–31.

Alesina, A. and La Ferrara, E. 2002. 'Who trusts others?', *Journal of Public Economics*, 85(2): 207–234.

Al-Ghamdi, S.M., Sohail, S. M. and Al-Khaldi, A. 2007. 'Measuring consumer satisfaction with consumer protection agencies: some insights from Saudi Arabia', *The Journal of Consumer Marketing,* 24(2): 71–79.

American Marketing Association. 2004. *Definition of marketing,* Available from: https://www.ama.org/aboutama/pages/definition-of-marketing.aspx. Accessed: 5 March 2016.

American Marketing Association. 2013. *Definition of marketing,* Available from: https://www.ama.org/aboutama/pages/definition-of-marketing.aspx. Accessed: 5 March 2016.

Allen, N.J. and Meyer, J.P. 1990. 'The measurement and antecedents of affective, continuance and normative commitment to the organization', *Journal of Occupational Psychology*, 63. 1–18.

Alvarez, S.A., Barney, J.B. and Bosse, D.A. 2004. 'Trust and its alternatives', *Human Resource Management*, 42(4): 393–404.

Arnett, D. B. and Badrinarayanan, V. 2005. 'Enhancing customer-needs-driven CRM strategies: Core selling teams, knowledge management competence, and relationship marketing competence', *Journal of Personal Selling & Sales Management,* 25(4): 329–343.

Andaleeb, S. 1996. 'An experimental investigation of satisfaction and commitment in marketing channels: The role of trust and dependence', *Journal of Retailing*, 72 (1): 77–93.

Anderson, J.C. and Narus, J.A. 1990. 'A model of distributor firm and manufacturer firm working partnerships', *Journal of Marketing*, 54(1): 42-58.

Anderson, E. and Barton. W. 1992. 'The use of pledges to build and sustain commitment in distribution channels', *Journal of Marketing Research*, 14 (February 1992): 18–34.

Andrianaivo, M. and Yartey, C.A. 2009. 'Understanding the growth of African financial markets', *IMF Working Paper*, WP/09/182.

Armstrong, A. 2012. 'Restoring trust in banking', *National Institute Economic Review*, 221(1): 4–10.

Arnott, D.C. 2007. 'Trust – current thinking and future research', *European Journal of Marketing*, 41(9/10): 981–987.

Asher, A. 1998. 'Going global: a new paradigm for consumer protection', *The Journal of* Consumer Affairs, 32(2): 183-203.

Axelrod, R. 1984. *The evolution of cooperation*. New York: Basic Books

Bachmann, R. 2001. 'Trust, power and control in trans-organizational relations', *Organization Studies*, 22(2): 337.

Bagozzi, R. P. 1975. 'Marketing as exchange', *Journal of Marketing*, 39 (October): 32–39.

Bagraim, J.J. and Hime, P. 2007. 'The dimensionality of workplace interpersonal trust and its relationship to workplace affective commitment', *SA Journal of Industrial Psychology,* 33(3): 43–48.

Baker, M. 2000. 'Selecting a research methodology', *The Marketing Review*, 1. 373–397.

Ball, J. 2009. 'The currency of trust: What business leaders can learn from the extreme poor'. *Ivey Business Journal*, *73*, 7-17.

Ball, D., Coelho, P.S. and Machas, A. 2004. 'The role of communication and trust in explaining customer loyalty: An extension to the ECSI model', *European Journal of Marketing,* 38(9/10): 1272–1293.

Babbie, E. 2010. *The practice of social research*.12th Edition. Southbank, Victoria: Wadsworth/Thompson.

Barclay, D.W. and Smith, J.B. 1997. 'The effects of organizational differences and trust on the effectiveness of selling partner relationships', *Journal of Marketing*, 61(1): 3–20.

Barney, B., and Hansen, H. 1994. 'Trustworthiness as a source of competitive advantage', *Strategic Management Journal*, 15. 175–190.

Bart, Y., Shankar, V., Sultan, F. and Urban, G.L. 2005. 'Are the drivers and role of online trust the same for all web sites and consumers? A large-scale exploratory empirical study', *Journal of Marketing*, 69(4): 133–152.

Bartels, R. 1976. 'The history of marketing thought', 2nd ed., Columbus Grid Inc.

Bateson, J.E.G. and Hoffman, K.D. 2011. *Services marketing*. 4th ed. International ed. Canada: South-Western Cengage Learning.

Beck, T. A., Demirguc-Kunt, A. and Martinez Peria, M.S. 2005. 'Reaching out: access to and use of banking services across countries', *World Bank, Policy Research Working Paper*, 3754.

Beck, T.A., Maimbo, S.M., Faye, I. and Triki, T. 2011. *Financing Africa: Through the crisis and beyond*, Washington: World Bank.

Bell, E. and Bryman, A. 2007. 'The ethics of management research: an exploratory content analysis', *British Journal of Management*, 18. 63–77.

Berger, A.N. and Humphrey, D.B. 1997. 'Efficiency of financial institutions: International survey and directions for future research', *European Journal of Operational Research*, 98. 175–212.

Berkowitz, B. 2016. 'The patient experience and patient satisfaction: Measurement of a complex dynamic', *The Online Journal of Issues in Nursing*, 21(1).

Berry, L.L. 1983, 'Relationship marketing', in L. Berry, G.L. Shostack and G.D. Upah (eds.), *Emerging perspectives on services marketing*, pp. 25–28, American Marketing Association, Chicago, IL.

Berry, L.L. 1995. 'Relationship marketing of services – growing interest, emerging perspectives', *Journal of the Academy of Marketing Science*, 23(4): 236–45.

Bettencourt, L.A. and Brown, S.W. 1997. 'Contact employees: Relationships among workplace fairness, job satisfaction and pro-social service behaviours', *Journal of Retailing*, 73(1): 39–61.

Bews, N.F. and Rossouw, G.J. 2002. 'The role of business ethics in facilitating trustworthiness', *Journal of Business Ethics*, 39(4): 377–389.

Bhattacherjee, A. 2002. 'Individual trust in online firms: Scale development and initial test', *Journal of Management Information Systems*, 19(1): 211–241.

Bibow, J. 2010. 'A Post Keynesian perspective on the rise of central bank independence: A dubious success story in monetary economics', *Levy Economics Institute of Bard College Working Paper.*

Blackburn, R.A., Carey, P. and Tanewski, G. 2010. 'The role of trust, relationships and professional ethics in the supply of external business advice by accountants to SMEs', *Australian Centre for Financial Studies: Finsia Banking and Finance Conference 2010.*

Blomqvist, K. 2005. 'Trust in a dynamic environment - fast trust as a threshold condition for asymmetric technology partnership formation in the ICT Sector'. In K. Bijlsma-Frankema and R. Klein Woolthuis (Eds): *Trust under pressure: Investigations of trust and trust building in uncertain circumstances.* Cheltenham: Edward Elgar, 127-147.

Boote, D.N. and Beile, P. 2005. 'Scholars before researchers: On the centrality of the dissertation literature review in research preparation', *Educational Researcher*, 34(6): 3–15.

Brink, A. and Berndt, A. 2008. *Relationship marketing & customer relationship management*, Cape Town: Juta.

Broaddus, A. 1994. 'Choices in banking policy', *Federal Reserve Bank of Richmond Economic Quarterly*, (80): 1–9.

Bruhn, M. 2003. *Relationship Marketing Management of Customer relationship*. England: Pearson Education Limited.

Bryman, A. 2006. 'Integrating quantitative and qualitative research: how is it done?', *Qualitative Research*, 6 (1): 97–113.

Bryman, A. 2008. *Social research methods,* 3rd edition. New York: Oxford University Press.

Bryman, A. and Bell, E. 2015. *Business research methods,* 4th edition. Oxford: Oxford University Press.

Byrne, B.M. 2013. *Structural equation modelling, basic concepts, applications, and programming*, Mahwah: Lawrence Erlbaum Associates.

Bülbül, D. 2013. 'Determinants of trust in banking networks', *Journal of Economic Behavior & Organization*, 85(1): 236–248.

Bussing, A. 2002. 'Trust and its relations to commitment and involvement in work and organisations', *South African Journal of Industrial Psychology, 28* (4), 36.

Butler Jr, J. K., 1991. 'Toward understanding and measuring conditions of trust: Evolution of a conditions of trust inventory', *Journal of Management*, 17(3): 643.

Butler, J.K. and Cantrell, R.S., 1984. 'A behavioral decision theory approach to modelling dyadic trust in superiors and subordinates', *Psychological Reports*, 55(1): 19–28.

Buttle, F., 1996. 'SERVQUAL: review, critique, research agenda', *European Journal of Marketing,* 30(1): 8–32.

Büttner, O.B. and Göritz, A.S. 2008. 'Perceived trustworthiness of online shops', *Journal of Consumer Behavior*, 7(1): 35–50.

Burke, J. 2017. 'Emmerson Mnangagwa promises 'free and fair' elections in Zimbabwe', The Guardian 24 November 2017. Available from:https://www.thegurdian.com/world/2017/nov/emmerson-mnangagwa-sworn-in-as-Zimbabwe's-president. Accessed: 1 December 2017.

Caldwell, C. and Clapham, S.E. 2003. 'Organisational Trustworthiness: An International Perspective', *Journal of Business Ethics*, 47(4): 349-364.

Caldwell, C. and Jeffries, F.L. 2001. 'Ethics, norms, dispositional trust, and context: components of the missing link between trustworthiness and trust', *Eighth Annual Conference on Ethics in Business*, Chicago: DePaul University.

Calnan, M. 2005. 'Trust relations in the 'new' NHS: theoretical and methodological challenges', *Taking Stock of Trust, ESRC Conference*, London School of Economics.

Camén, C., Gottfridsson, P. and Rundh, B. 2011. 'To trust or not to trust? Formal contracts and the building of long-term relationships', *Management Decision*, 49(3): 365–383.

Caracelli, V. J., and Greene, J. C., 1997. 'Crafting mixed-method evaluation designs', In J. C. Greene, and V. J. Caracelli (Eds): *Advances in mixed-method evaluation: The challenges and benefits of integrating diverse paradigms.* San Francisco: Jossey-Bass. 19–32.

Cassell, C., Buehring, A., Symon, G., Johnson, P. and Bishop, V. 2006. 'Qualitative management research: a thematic analysis of interviews with stakeholders in the field', *ESRC Benchmarking Good Practice in Qualitative Management Research*, ESRC Grant Number H33250006. Swindon: The Economic and Social Research Council.

Castaldo, S. 2007. *Trust in market relationships*, Northampton: Edward Elgar Publishing.

Čater, B. and Čater, T. 2009. 'Emotional and rational motivations for customer loyalty in business-to-business professional services', *Service Industries Journal*, 29(8): 1151-1169.

Čater, T. and Čater, B. 2010. 'Product and relationship quality influence on customer commitment and loyalty in B2B manufacturing relationships', *Industrial Marketing Management*, 39(8): 1321–1333

Čater, B., and Zabkar, V. 2009. 'Antecedents and consequences of commitment in marketing research services: The client's perspective', *Industrial Marketing Management*, 38(7): 785-797.

Castelfranchi, D. and Falcone, R. 2010. 'Trust theory: A socio-cognitive and computational model', *Wiley Series in Agent Technology*, 18.

Chaudhuri, A. and Holbrook, M. 2001. 'The chain of effects from brand trust and brand affect to brand performance: The role of brand loyalty', *Journal of Marketing*, 65(2): 81–93.

Chong, B., Yang, Z. and Wong, M. 2003. 'Asymmetrical impact of trustworthiness attributes on trust, perceived value and purchase intention: *A* conceptual framework for cross-cultural study on consumer perception of online auction', *ACM International Conference Proceeding Series*, Pittsburgh, Pennsylvania, 50. 213–219.

Christopher, M., Payne, A. and Ballantyne, D., 1991. *Relationship marketing: Bringing quality, customer service, and marketing together*. Oxford: Butterworth-Heinemann.

Čihák, M., Demirgüç-Kunt, A., Feyen, E., and Levine, R. 2012. 'Benchmarking financial systems around the world', *World Bank: Policy Research Working Paper*, 6175.

Cohen J. 1988. *Statistical power analysis for the behavioral sciences.* 2nd edition. Mahwah: Lawrence Erlbaum Associates.

Coleman, J S. 1990. *Foundations of social theory*. Cambridge: Harvard University Press.

Collingridge, D. S. and Gantt, E. E. 2008. 'The quality of qualitative research', *American Journal of Medical Quality*, 23(5): 389–395.

Collins, D. 2003. 'Pretesting survey instruments: An overview of cognitive methods', *Quality of Life Research*, 12(3): 229–238.

Collis, J. and Hussey, R. 2009. *Business Research: A practical guide for undergraduate and postgraduate students,* 3rd ed., New York: Palgrave Macmillan.

Colquitt, J.A., Scott, B.A. and LePine, J.A. 2007. 'Trust, trustworthiness, and trust propensity: A meta-analytic test of their unique relationships with risk taking and job performance', *Journal of Applied Psychology,* 92. 909–927.

Corritore, C.L., Kracher, B. and Wiedenbeck, S. 2003. 'On-line trust: concepts, evolving themes, a model'*, International Journal of Human-Computer Studies*, 58(6): 737–758.

Coulter, K.S. and Coulter, R.A. 2002. 'Determinants of trust in a service provider: the moderating role of length of relationship', *Journal of Services Marketing*, 16(1): 35–50

Coulter, K.S. and Coulter, R.A. 2003. 'The effects of industry knowledge on the development of trust in service relationships'*, International Journal of Research in Marketing*, 20(1): 31–43.

Crabtree, S. 2013. 'European countries lead world in distrust of banks', *Gallup World*, May 20. Available from: www.gallup.com/poll/162602/european-countries-lead-world-distrustbanks.aspx. Accessed: 8 January 2015.

Creswell, J.W. and Plano C.V.L. 2011. *Designing and conducting mixed methods research* 2nd edition. Thousand Oaks: Sage.

Creswell, J.W., Goodchild, L. and Turner, P. 1996. 'Integrated qualitative and quantitative research: Epistemology, history, and designs', In Smart, J. (Ed.): *Higher Education: Handbook of Theory and Research 11*. New York: Agathon Press. 90–136.

Creswell, J. W. 2014. *Research design: Qualitative, quantitative and mixed methods approaches*. 4th edition. Thousand Oaks: Sage.

Croson, R. and Buchan, N. 1999. 'Gender and culture: International experimental evidence from trust games', *The American Economic Review*, 89 (2): 386–391.

da Silva Terres, M., dos Santos, C.P. and Basso, K. 2015. 'Antecedents of the client's trust in low- versus high consequence decisions', *Journal of Services Marketing*, 29(1): 26–37.

Das, T.K. and Teng, B.S. 1998. 'Between trust and control: developing confidence in partner cooperation in alliances', *Academy of Management Review*, 23(3): 491–512.

Davis, G., Pecar, B., Santana, L. and Burke, A. 2014. *Statistics for the social sciences using Excel®: A first course for South African students.* Cape Town: Oxford University Press Southern Africa.

Day, G.S. 2000. 'Managing marketing relationships', *Journal of the Academy of Marketing Science,* 28(1): 24–30.

De Gregorian, J. and Guidotti, P.E. 1998. 'Financial development and economic growth', *World Development*, 23. 433–48.

De Jonge, J., Van Trijp, H., Van der Lans, I.A, Renes, R.J. and Frewer, L. (2008b). 'How trust in institutions and organizations builds general consumer confidence in the Safety of food: A decomposition of effects'. *Appetite,* 51(2), 311–317

De Vaus, D. 2001. *Research Designs in social research*. Available from:http://www.tim.ethz.ch/education/courses/courses_fs_2012/course_docsem_fs_2012/Literature/14_deVaus_Forschungsdesign. Accessed: 19 September 2016.

Deb, M. and Chavali, K. 2010. 'Significance of trust and loyalty during financial crisis: a study of customer behavior of Indian banks', *South Asian Journal of Management*, 17(1): 43–60.

DeVellis, R.F. 2012. *Scale development: Theory and applications*. Thousand Oaks: Sage.

de Ruyter, K., Moorman, L. and Lemmink, J. 2001. 'Antecedents of commitment and trust in customer-supplier relationships in high technology markets', *Industrial Marketing Management* 30(3): 271–86.

Deutsch, M. 1958. 'Trust and suspicion', *Journal of Conflict Resolution, 2.* 265–279.

Deutsch, M. 1973. *The resolution of conflict: Constructive and destructive processes*, New Haven: Yale University Press.

Dhliwayo, C.L. 2015. *Limiting the risk of failure in financial institutions*. Available from: http://www.rbz.co.zw/assets/speech-by-dr.-dhliwayo-on-limiting-the-risk-of-bank-failures-at-the-paab-workshop. Accessed: 20 January 2016.

Dia, E. 2011. 'Uncertainty, trust, and the regulation of the banking industry', *International Review of Economics*, 58(2): 213–228.

Dietz, G. and Den Hartog, D.N. 2006. 'Measuring trust inside organisations,' *Personnel Review*, 35(5): 557-588.

Dimitriadis, S. and Kyrezis, N. 2008. 'Does Trust in the Bank Build Trust in its Technology-based Channels?', *Journal of Financial Services Marketing*, 13(1): 28–38.

Dion, P., Easterling, D. and Miller, S. J. 1995. 'What is really necessary in buyer and seller relationships?', *Industrial Marketing Management*, 24 (1): 1-9.

Doney, P.M. and Cannon, J.P. 1997. 'An examination of the nature of trust in buyer-seller relationships', *Journal of Marketing*, 61(2): 35-51.

Doney, P.M., Barry, J.M. and Abratt, R. 2007. 'Trust determinants and outcomes in global B2B services', *European Journal of Marketing*, 41(9): 1096–116.

Du Plessis, P.J., Rousseau, G.G., Boshoff, C., Ehlers, L., Engelbrecht, M., Joubert, R., and Sanders, S. 2007. *Buyer behaviour: Understanding consumer psychology and marketing*, 4th edition. Cape Town, South Africa: Oxford University Press Southern Africa.

Du Plessis, C. 2010. 'Theoretical guidelines for social media marketing communication. Communicare', *Journal of Communication Sciences* 29(1): 1-20.

Dovalienė, A., Gadeikienė, A. and Piligrimienė, Ž. 2007. 'Trust as an antecedent of long-term relationships with service customers: The case of odontology services', *Economics and Management,* 12. 246–355.

Dwyer, F. R., Schurr, P.H. and Oh, S. 1987. 'Developing buyer-seller relationships', *Journal of Marketing,* 51. 11–27.

Dzomira, S. 2014. 'Analysis of bank failures during financial tumult in Africa-Zimbabwe: A historical review', *Journal of Governance and Regulation*, 3(3-1), 75-80.

Edelman. 2013. *The Edelman trust barometer executive summary*, New York: Edelman.

Edelman. 2015. *Edelman trust barometer*. Available from: http://www.edelman.com/2015-edelman-trust-barometer/ Accessed: 07 August 2017.

Egan, J. 2008. *Relationship marketing – Exploring relational strategies in marketing*. 3rd edition. Harlow: Pearson Education.

Ennew, C. and Sekhon, H. 2003. 'The role of trust in the financial services sector: a marketing perspective', Financial Services Research Forum, Nottingham University Business School.

Ennew, C. and Sekhon, H. 2007. 'Measuring trust in financial services: The trust index', *Consumer Policy Review*, 17(2): 62–68.

Enshassi, A., Mohamed, S. and Karriri, A. 2010. 'Factors affecting bid / no bid decision in the Gaza Strip – Contractors' perspectives', *Journal of Financial Management of Property and Construction*, 15(2):118–142.

Ermisch, J. and Gambetta, D. 2006. 'People's trust: The design of a survey-based experiment', *IZA DP No. 2216.* Bonn: Institute for the Study of Labor,

Esterberg, K. G. 2002. *Qualitative methods in social research*, Boston: McGraw Hill.

European Investment Bank. 2015. *Recent trends in banking in sub-Saharan Africa from financing to investment*. Available from: http://www.eib.org/attchments/efs/economic_report_banking_africa_from_from_financing_to_investment_en.pdf.Aceesed:3 September 2016.

Fang, E., Palmatier, R.W., Scheer, L.K. and Li, N. 2008. 'Trust at different organizational levels', *Journal of Marketing*, 72(2): 80–98.

FBC Securities. 2013. *Depositors Protection Corporation has paid more than 50 percent of the insured deposits*, Available from: http://www.sundaymail.co.zw/business-8-17-august-2014-dpc-pays-50pc-of-insured-deposits/. Accessed: 3 May 2015.

Ferrin, D.L., Bligh, M.C. and Kohles, J.C. 2008. 'It takes two to tango: An interdependence analysis of the spiralling of perceived trustworthiness and cooperation in interpersonal and intergroup relationships', *Organizational Behavior and Human Decision Processes*, 107. 161–178.

Field, A. 2005. *Discovering statistics using SPSS*, 2nd edition. London: Sage.

Fink, A., 1995. *The survey handbook (Vol 1):* Thousand Oaks: Sage.

FinScope. 2011*. FinScope consumer survey Zimbabwe 2011.* Available from: http://www.finmark.org.za/wp-content/uploads/2016/02/Zimbabwe_Report_FNL2012.pdf*.* Accessed 4 February 2018

Fock, K. Y. H. 2004. 'The empowerment of service workers: Conceptualization and impacts across cultures', Unpublished doctoral dissertation, the Chinese University of Hong Kong, Hong Kong.

Fornell, C. and Larcker, D.F. 1981. 'Evaluating Structural Equation Models with Unobservable Variables and Measurement Error', *Journal of Marketing Research,* 18, 39-50.

Fowler, F.J. 2002. *Survey research methods,* 3rd edition, Thousand Oaks: Sage Franklin, C.S. and Ballan, M. 2001. 'Reliability and validity in qualitative research'. In Thyer, B.A. (Ed.). *The Handbook of Social Work Research Methods*. London: Sage. 273–292.

Fukuyama, F. 1995. *Trust: The social virtues and the creation of prosperity*. New York: The Free Press.

Fullerton, G. 2003. 'When does commitment lead to loyalty?', *Journal of Service Research*, 5(4): 333–344.

Gambetta, D. G. 1988. 'Can we trust trust?' In Gambetta, D.G. (Ed.): *Trust.* New York: Basil Blackwell, 213–237.

Ganesan, S. 1994. 'Determinants of long-term orientation in buyer-seller relationship', *Journal of Marketing*, 58(2): 1–19.

Gaur*,* S.S., Xu*, Y.,* Quazi*,* A*.* and Nandi, S. 2*011.* 'Relational impact of service providers' interaction behavior in healthcare', *Managing Service Quality: An International Journa*l, 21 (1): 67–87.

Gay, L., Mills, G. and Airasian, P. 2012. *Educational Research: Competencies for analysis and applications*. 10th edition. Upper Saddle River: Pearson Education.

Geyskens, I., Steenkamp, J.E.M. and Kumnar, N. 1998. 'Generalizations about trust in marketing channel relationships using meta-analysis', *International Journal of Research in Marketing*, 15(3): 223–248.

Gill, A., Flaschner, A. and Shachar, M. 2006. 'Factors that affect the trust of business clients in their banks', *International Journal of Bank Marketing*, 24(6): 384–305.

Gillespie, N. and Dietz, G. 2009. 'Trust repair after an organization-level failure', *Academy of Management Review*, 34(1): 127–145.

Gillespie, N. 2012. 'Measuring trust in organizational context: An overview of survey-based measures'. In Lyon, F. Möllering, G. and Saunders, M.N.K. (Eds.): *Handbook of Research Methods on Trust,* Cheltenham: Edward Elgar, 175–188.

Gillespie, N. and Hurley, R. 2013. 'Trust and the global financial crisis', in R. Bachmann, and A. Zahee (Eds*.): Advances in Trust Research*, Cheltenham: Edward Elgar. 177–204.

Gillham, B. 2000. *Case study research methods*. London: Continuum.

Gounaris, S.P. 2005. 'Trust and commitment influences on customer retention: insights from business-to-business services'. *Journal of Business Research*, 58. 126–140.

Granovetter, M. 1973. The strength of weak ties. *American Journal of Sociology,* 78 (6): 1360–1380.

Granovetter, M. 1985. 'Economic action and social structure: the problem of embeddedness', *American Journal of Sociology,* 91: 481–510.

Gravetter, F.J. and Wallnau, L.B. 2017. *Statistics for the behavioral sciences.* 10th edition. Boston: Cengage Learning.

Grayson, K., Johnson, D. and Chen, D.R. 2008. 'Is firm trust essential in a trusted environment? How trust in the business context influences customers', *Journal of Marketing Research,* 45(2): 241–256.

Greene, J.C. 2007. *Mixed methods in social inquiry.* New York: Wiley.

Grönroos, C. 1994. 'From marketing mix to relationship marketing: Towards a paradigm shift in marketing', *Management Decision*, 32(2): 4–20.

Grönroos, C. 1997. 'Value-driven relational marketing: From products to resources and competences.' *Journal of Marketing Management*, 13(5): 407–420.

Gruen, T.W., John, O.S. and Frank, A. 2000. 'Relationship marketing activities, commitment, and membership behaviors in professional associations', *Journal of Marketing*, 64(3): 34–49.

Gruen, T.W., Summers, J.W. and Acito, F. 2000. 'Relationship marketing activities, commitment, and membership behaviors in professional associations', *Journal of Marketing*, 64(3): 34–49.

Guenzi, P. and Georges, L. 2010. 'Interpersonal trust in commercial relationships: Antecedents and consequences of customer trust in the salesperson', *European Journal of Marketing*, 44(1/2): 114–138.

Gulati, R. and Nickerson, J.A. 2008. 'Interorganisational trust, governance choice, and exchange performance', *Organization Science*, 19(5): 688–708.

Gundlach, G.T. and Cannon, J.P. 2010. 'Trust but verify? The performance implications of verification strategies in trusting relationships', *Journal of the Academy of Marketing Science*, 38(4): 399–417.

Gupta, A. and Sahu, G.P. 2012. 'A literature review and classification of relationship marketing research', *International Journal of Customer Relationship Marketing and Management*, Vol. 3, No. 1, pp.56–81.

Gutierrez, S., Cillan, J. and Izquierdo, C. 2004. 'The consumer's relational commitment: main dimensions and antecedents', *Journal of Retailing and Customer Service*, 11. 351–367.

Hair, J.F., Black, W.C., Babin, B.J., Anderson. R.E. and Tatham, L.R. 2006. *Multivariant data analysis*. Upper Saddle River: Pearson International Edition.

Hair, J.F., Ringle, C.M. and Sarstedt, M. 2011. 'PLS-SEM: indeed a silver bullet', *Journal of Marketing Theory and Practice*, 19(2): 139–151.

Hair Jr., J.F., Wolfinbarger, M.F., Ortinau, D.J. and Bush, R.P. 2008. *Essentials of marketing research*, New York: McGraw-Hill/Irwin.

Hair, J.F., Black, W.C., Babin, B.J. and Anderson, R.E. 2014. *Multivariate data analysis*, 7th edition. Harlow: Pearson Education.

Hall, M.A., Camacho, F., Duggan, E. and Balkrishnan, R. 2002. 'Trust in the medical profession: Conceptual and measurement issues', *Health Services Research*, 37(5): 1419–1439.

Han, H. and Back, K. 2006. 'Investing the effects of consumption emotions on customer satisfaction and repeat visit intentions in the lodging industry', *Journal of Hospitality & Leisure Marketing,* 15(3): 5–30.

Handfield, R.B. and Bechtel, C. 2004. 'Trust, power, dependence and economics: Can SCM research borrow paradigms?', *International Journal of Integrated Supply Management,* 1(1): 2004. 3–32.

Handley, K. 2012. 'Country size, technology and manufacturing location', *Review of International Economics*, 20(1): 29–45.

Hardin, R .1991. Trusting Persons, Trusting Institutions. In *Strategy and Choice*, edited by Zeckhauser, R. J. Cambridge MA, USA: The MIT Press.

Hardin, R. 2002. *Trust and trustworthiness*. New York: Russell Sage Foundation.

Hatch, J.A. 2002. *Doing qualitative research in education settings*. Albany: State University of New York Press.

Hayes, B.C., Douglas, C. and Bonner, A. 2015. 'Work environment, job satisfaction, stress and burnout among haemodialysis nurses', *Journal of Nursing Management*, 23 (5): 588–598.

Hearn, F., 1997. *Moral order and social disorder: The American search for civil society*. New York: Aldine de Gruyter.

Heffernan, T., O'Neill, G., Travaglione, G. and Droulers, M. 2008. 'Relationship marketing – The impact of emotional intelligence and trust on bank performance', *International Journal of Bank Marketing*, 26 (3): 183–199.

Heiman, G. 2015. *Behavioral Statistics STAT.* Student Edition. CENGAGE Learning ISBN-10: 1-285-45814-1 | ISBN-13: 978-1-285-45814-1.

Hennig-Thurau, T., Gwinner, K.P. and Gremler, D.D. 2002. 'Understanding relationship Marketing outcomes: an integration of relational benefits and relationship quality', *Journal of Service Research*, 4(3): 230.

Hennig-Thurau, T., Gwinner, K.P., Walsh, G. and Gremler, D.D. 2004. 'Electronic word-of-mouth via consumer-opinion platforms: what motivates consumers to articulate themselves on the internet?' *Journal of Interactive Marketing* 18 (1): 38–52.

Hernon, P. and Schwartz, C. 2009. 'Procedures: research design', *Library and Information Science Research*, 31: 1–2.

Hesse-Biber, S. and Leavy, P. 2004. *Approaches to qualitative research: A reader on theory and practice*, New York: Oxford University Press.

Hoffman, K.D., Bateson, J.E.G., Elliott, G. and Birch, D. 2010. *Services marketing: concepts, strategies and cases*. Asia-Pacific edition. Melbourne: Cengage Learning.

Hofstede, G.H. 2001. *Culture's consequences: comparing values, behaviors, institutions and organizations across nations*, Thousand Oaks: Sage.

Hooper, D., Coughlan, J. and Mullen, M.R. 2008. 'Structural equation modelling: Guidelines for determining model fit', *The Electronic Journal of Business Research Methods,* 6(1): 53–60.

Hoq, M., Sultana, M. and Amin, N. 2011. 'The effect of trust, customer satisfaction and image on customers' loyalty in Islamic banking sector', *South Asian Journal of Management*, 17(1): 70–93.

Howcroft, B., Hamilton, R. and Hewer, P. 2007. 'Customer involvement and interaction in retail banking: an examination of risk and confidence in the purchase of financial products', *Journal of Services Marketing*, 21(7): 481.

Hoyle, R. H. 1995. 'The structural equation modelling approach: Basic concepts and fundamental issues', In Hoyle, R. H. (Ed.). *Structural Equation Modelling: Concepts, issues, and applications*, Thousand Oaks: Sage, 1–15.

Huemer, L. 1998. *Trust in business relationships: Economic logic or social interaction?* Umea: Borea Bokforlag,

Huff, L.C. 2005. 'Stages in the development of customers' trust for services providers', *Asia Pacific Advances in Consumer Research*, 6: 105-110.

Hunt, S.D. 2000. *A general theory of competition.* Thousand Oaks: Sage.

Hunt, S.D. and Arnett, D.B. 2006. 'Does marketing success lead to market success?', *Journal of Business Research*, 59(7): 820–828.

Hunt, S.D. and Goolsby, J. 1988. 'The rise and fall of the functional approach to marketing: A paradigm displacement perspective', In Nevett, T. and Fullerton, R.A. (Eds.): *Historical Perspectives in Marketing: Essays in Honor of Stanley C. Hollander.,* Massachusetts: Lexington Books, 35–51.

Hurley, R., Gong, X. and Waqar, A. 2014. 'Understanding the loss of trust in large banks', *International Journal of Bank Marketing*, 32. 348–366.

Hurley, R.F. 2006. 'The decision to trust', *Harvard Business Review*, 84(9): 55–62.

Hurley, R.F. 2012. 'The trustworthy leader: the first step toward creating high-trust organizations', *Leader to Leader*, 66. 33–39.

International Monetary Fund. 2012. *Article IV consultation Zimbabwe: Country report no. 12/279. September 2012*. Washington D.C: IMF.

Irani, Z., Love, P.E., Elliman, T., Jones, S. and Themistocleous, M. 2005. 'Evaluating e-government: learning from the experiences of two UK local authorities', *Information Systems Journal,* 15(1): 61–82.

Jabnoun, N. and Khalifa, A. 2005. 'A customized measure of service quality in the UAE', *Managing Service Quality*, 15(4): 374–388.

Jackson, S.L. 2014. *Statistics Plain and Simple.* Third Edition, Cengage learning ISBN-10: 1-133-95575-4 | ISBN-13: 978-1-133-95575-7.

Jarvenpaa, L., Tractinsky, N. and Vitalec, M. 2000. 'Consumer trust in an internet store', *Information Technology and Management,* 1(1-2): 45–71.

Järvinen, R.A. 2014. 'Consumer trust in banking relationships in Europe', *International Journal of Bank Marketing*, 32(6): 551–566

Jin, X.L., Lee, M.K.O. and Cheung, C.M.K. 2010. 'Predicting continuance in online communities: Model development and empirical test', *Behavior and Information Technology*, 29(4): 383–394.

Johl, S.K., Bruce, A. and Binks, M. 2012. 'A study of the use of mixed method approach via sequential procedure to investigate corporate governance in corporate entrepreneurship among the 100 UK Financial Times Stock Exchange (FTSE) Companies', *African Journal of Business Management*, 6(21): 6369–6377.

Jo, S., Hon, L.C., and Brunner, B.R. 2004. 'Organization-public relationships: Measurement validation in a university setting', *Journal of Communication Management*, 9. 14–27.

Johnson, D. and Grayson, K. 2005. 'Cognitive and affective trust in service relationships', *Journal of Business Research*, 58(4): 500–507.

Johnson, D.S. and Peterson, M. 2014. 'Consumer financial anxiety', *International Journal of Bank Marketing*, 32(6): 515–533.

Johnson, R.B., and Onwuegbuzie, A.J. 2004. 'Mixed methods research: A research paradigm whose time has come', *Educational Researcher*, 33: 14–26.

Johnson, R.B., Onwuegbuzie, A.J. and Turner, L.A. 2007. 'Toward a definition of mixed methods research', *Journal of Mixed Methods Research*, 1: 112.

Johnson, R.B., and Turner, L.A. 2003. 'Data collection strategies in mixed methods research'. In A. Tashakkori and C. Teddlie (Eds.), *Handbook of Mixed Methods in Social and Behavioral Research.* Newbury Park: Sage. 297–319.

Jordan, C. and Hoefer, R.A. 2001. 'Reliability and validity in quantitative measurement', In Thyer, B.A. (Ed.). *The Handbook of Social Work Research Methods*, 53–68.

Kantsperger, R. and Kuntz, W.H. 2010. 'Consumer trust in service companies', *Managing Service Quality*, 20(1): 4–45.

Kassim, N.M. and Abdulla, A.K.M.A. 2006. 'The influence of attraction on internet banking: an extension to the trust-relationship commitment model', *The International Journal of Bank Marketing*, 24(6): 424–442.

Keller, G. 2018. *Statistics for management and economics.* 11th edition. Mason: Cengage Learning.

Keppel, G. and Wickens, T. D. 2004. *Design and analysis: A researcher's handbook.* 4th ed. Upper Saddle River, NJ: Pearson.

Kesharwani, A. and Bisht, S.S. 2012. 'The impact of trust and perceived risk on internet banking adoption in India: An extension of technology acceptance model', *International Journal of Bank Marketing*, 30(4): 303–322.

Kharouf, H. 2010. 'Relationship marketing: an evaluation of trustworthiness within the Jordanian hotel sector', Unpublished doctoral thesis. Coventry University, Coventry, England.

Kharouf H., Lund, D.J. and Sekhon, H. 2014. 'Building trust by signalling trustworthiness in service retail', *Journal of Services Marketing*, 28(5): 361–373.

Kharouf, H. and Sekhon. H. 2009. 'Trustworthiness within the hotel sector: A structural model', *in the proceeding of 3rd IIMA Conference on Marketing Paradigms for Emerging Economies*: Indian Institute of Management, Ahmedabad, 445–449.

Kharouf, H. and Sekhon, H. 2008. 'An evaluation of trustworthiness within the hotel sector: a conceptual framework and scale development', *The Proceedings of ANZMAC Annual Conference*, Sydney, 1 December.

Kim, E. and Tadisina, S. 2005. 'Factors impacting customers' initial trust in e-businesses: an empirical study', System Sciences 2005 HICSS. *Proceedings of the 38th Annual Hawaii International Conference*, 170b.

Kim, G., Shin, B.S. and Lee, H.G. 2009, 'Understanding dynamics between initial trust and usage intentions of mobile banking', *Information Systems Journal*, 19(3): 283–311.

Kingshott, R.P.J. 2006. 'The impact of psychological contracts upon trust and commitment within supplier-buyer relationships: a social exchange view', *Industrial Marketing Management*, 35(6): 724–739.

Kline, R.B. 2011. *Principles and practice of structural equation modelling*. New York: Guilford Press.

Korczynski, M. 2000. 'The political economy of trust', *Journal Management Studies*, 37(1): 21.

Kothari, C.R. 2004. *Research methodology: Methods and techniques*, New Delhi: New Age International Publishers.

Kotler, P., Keller, K. L., Brady, M., Goodman, M. and Hansen, T. 2009. *Marketing management,* Essex: Pearson Education.

Kramer, R.M. 1999. 'Trust and distrust in organizations: Emerging perspectives, enduring questions', *Annual Review of Psychology*. 50:569-598.

Kumar, R. 2005. *Research methodology: A step-by-step guide for beginners*, New Delhi: Sage.

Kumar, N., Hibbard, J.D. and Stern, L.W. 1994. 'The nature and consequences of marketing channel intermediary commitment', *Marketing Science Institute Working Paper*, 94. 115

Kumar, N., Scheer, L.K. and Steenkamp, J.B.E.M. 1995. 'The effect of supplier fairness on vulnerable resellers', *Journal of Marketing Research*, 32(1): 54–65.

Kupakuwana, P.S. 2012. 'Sustainable retail banking & asset management: Lessons from challenges faced by entrepreneurs in Africa economies', *Entrepreneurship-Gender, Geographies & Social Context.* In Tech

Ladhari, R. 2009. 'Service quality, emotional satisfaction, and behavioural intentions: A study in the hotel industry', *Managing Service Quality*, 19(3): 308-331

Lane, C. and Bachmann, R., 1998. *Trust within and between organisations: Conceptual issues and empirical applications*. Oxford: Oxford University Press.

Lee, M.K.O. and Turban, E. 2001. 'A trust model for consumer internet shopping', International', *Journal of Electronic Commerce*, 6. 75–91.

Leedy, P.D. and Ormrod, J.E. 2015. *Practical research: Planning and design*. 11th Edition. Boston: Pearson.

Levine, R. 2003. 'More on finance and growth: More of finance, more growth?' *Federal Research Bank of St. Louis Review*, 85(4): 537–546.

Levine, D.M., Szabat, K.A. and Stephan, D.F. 2015. *Business statistics - A first course*, New York: Pearson.

Lewicki, R.J., McAllister, D.J., and Bies, R.J. 1998. 'Trust and distrust: New relationships and realities'*, Academy of Management Review*, 23. 438–458.

Lewis, J. D. and Weigert, A. J. 1985a. Trust as a social reality. *Social Forces, 63*(4), 967-985.

Liu, T. and Wu. L. 2007. 'Customer retention and cross-buying in the banking industry: An integration of service attributes, satisfaction and trust', *Journal of Financial Services Marketing*, 12(2): 132–145.

Lorenz, E. 1988. 'Neither friends nor strangers: Informal networks of subcontracting in French industry'. In Gambetta, D. (Ed.): *Trust: Making and Breaking Cooperative Relations,* Oxford: Blackwell. 194 — 210.

Luhmann, N. 1988. 'Familiarity, confidence and trust: problems and alternatives', in Gambetta, D. (Ed.). *Trust: Making and Breaking Cooperative Relationships*. New York: Basil Blackwell. 94–107.

Luhmann, N. 2000.M 'Familiarity, confidence, trust: problems and alternatives'. In Gambetta, D. (Ed.). *Trust: Making and Breaking Cooperative Relations*, New York: Basil Blackwell. 94–107.

Mabvure, T.J., Gwangwava, E., Faitira, M., Mutibvu, C. and Kamoyo, M. 2012. 'Non-performing loan in commercial banks: A case of CBZ bank limited in Zimbabwe*', Interdisciplinary Journal of Contemporary Research in Business*, 4 (7): 467–488.

Macy, M., Skvoretz, J. 1998. 'The evolution of trust and cooperation between strangers: A computational model', *American Sociological Review*, 63. 638–660.

McGarry, E.D. 1953. 'Some viewpoints in marketing', *Journal of Marketing,* 17(3): 36–43.

McGarry, E.D. 1958. 'The propaganda function in marketing', *Journal of Marketing*, 22(4): 125–135.

Maguire, S. and Phillips, N. 2008. 'Citibankers at Citigroup: a study of the loss of institutional trust after a merger', *Journal of Management Studies*, 45(2): 372–401.

Mahadevan, B. and Venkatesh, A. 2000. 'A framework for building on-line trust for business to business e-commerce: Issues and challenges'. *IT Asia Millennium Conference*, November 28-29, 2000.

Makanyeza C., 2014. 'Consumer awareness, ethnocentrism, attitude and purchase behaviour toward imported poultry products: a Zimbabwean perspective', Doctoral Thesis. University of KwaZulu-Natal, South Africa.

Makoni, T.A. 2010. *Overview of Zimbabwean banking sector*. Available from: http://EzineArticles.com/?expert=Dr_Tawafadza_A_Makoni. Accessed: 14 December 2016.

Mandizvidza, W. 2011. *Bank resolution- Zimbabwe experience* Available from: http://www.ndic.gov.ng/files/Bank%20Resolution%20-%20ZIMBABWE%20Experience. Accessed: 2 February 2016.

Manerikar, V. and Manerikar, S. 2015. 'Cronbach's alpha', *A peer review research journal. aWEshkar WeSchool*, 19(1): 117-119.

Mataranyika, M 2015. *Zimbabwe banking industry fragile.* Available from:https//www.fin24.com/Companies/Financial-Services/Zimbabwe-banking-industry-fragile-. Accessed: 6 January 2016.

Matthews, B. and Ross, L. 2010. *Research methods: a practical guide for the social sciences*, Harlow: Longman.

Mavodza, J. and Ngulube, P. 2011. 'Exploring the use of knowledge management practices in an academic library in a changing information environment', *South African Journal of Libraries and Information Science*, 77(1): 15–25.

Mayer, R.C. and Gavin, M.B. 2005. 'Trust in management and performance: Who minds the shop while the employees watch the boss?', *Academy of Management Journal,* 48: 874–888.

Mayer, R.C. and Davis, J.H. 1999. 'The effect of the performance appraisal system on trust in management: A field quasi-experiment', *Journal of Applied Psychology*, 84(1): 123–36.

Mayer, R.C., Davis, J.H. and Schoorman, F.D. 1995. 'An integrative model of organizational trust', *Academy of Management Review*, 20(3): 709–734.

McAllister, D.J. 1995. 'Affect- and cognition-based trust as foundations for interpersonal cooperation in organizations', *Academy of Management Journal*, 38(1): 24–59.

McCabe, K.A., Rigdon, M.L. and Smith, V.L. 2003. 'Positive reciprocity and intentions in trust games', *Journal of Economic Behavior and Organization*, 52(2): 267–275.

McKnight, D.H. and Chervany, N.L. 2001. 'What trust means in e-commerce customer relationships: an interdisciplinary conceptual typology', *International Journal of Electronic Commerce*, 6(2): 35–59.

McKnight, D.H., Choudhury, V. and Kacmar, C. 2002. 'The impact of initial consumer trust on intentions to transact with a web site: a trust building model', *The Journal of Strategic Information Systems*, 11(3): 297–323.

McKnight, D.H., Cummings, L.L. and Norman, L.C. 1998. 'Initial trust formation in new organizational relationships', *The Academy of Management Review*, 23(3): 473–490.

Mentz, M.H. 2014. 'Developing a framework for relationship intention, satisfaction, loyalty and retention of SMEs in the business-to-business financing environment', Unpublished doctoral thesis. North-West University, South Africa.

Merriam-Webster's Online Dictionary. 2017. *Correlation.* Available from:https://www.merriam-webster.com/dictionary/correlation. Accessed: 20 April 2017.

Meyer, J.P., Allen, N.J. and Smith. C. 1993. 'Commitment to organizations and occupations: extension and test of a three-component conceptualization', *Journal of Applied Psychology*, 78. 538–551.

Meyer, J.P. and Allen, N.J. 1984. 'Testing the 'side-bet theory' of organizational commitment: Some methodological considerations', *Organizational Behavior and Human Performance, 17*.

Meyer, J.P. and Parfyonova, N.M. 2010. 'Normative commitment in the workplace: A theoretical analysis and re-conceptualization', *Human Resource Management Review*, 20. 283–294.

Misztal, B. A. 1996. *Trust in modern societies*. Cambridge: Polity Press.

Mlachila, M., Park, S.G. and Yabara, M. 2013. 'Banking in Sub-Saharan Africa. The macroeconomic context', *African Departmental Paper*, 13(3).

Mlambo, K., Kasekende, L. and Murinde, V. 2012. 'Comparative overview of bank regulatory experiences and the impact on bank competition and intermediation efficiency in Africa'. In Murinde, V. (Ed.): *Bank Regulatory Reforms in Africa.* New York: Palgrave Macmillan.

Modell, S. 2010. 'Bridging the paradigm divide in management accounting research: the role of mixed methods approaches' *Management Accounting Research*, 21(2): 124-129.

Mohamed, J. 2007. 'Financial sector reforms and growth: Evidence from Sub-Saharan African countries', *Working Progress Report*; Ibadan: University of Ibadan, Department of Economics.

Mohr, J. and Nevin, J.R. 1990. 'Communication strategies in marketing channels: A theoretical perspective', *Journal of Marketing*, 54 (October): 36–51.Möllering, G. 2001. 'The nature of trust: from Georg Simmel to a theory of expectation, interpretation and suspension', *Sociology*, 35(2): 403–420.

Möllering, G. 2006. *Trust: Reason, routine, reflexivity*, Oxford: Elsevier.

Montfort M, Seok G.P. and Masafumi Y. 2013. *Banking in Sub-Saharan Africa: the macroeconomic context,* Washington D.C.: International Monetary Fund.

Moorman, C., Deshpande, R. and Zaltman, G. 1993a. 'Factors affecting trust in market relationships', *Journal of Marketing*, 57(1): 81–101.

Moorman, C., Zaltman, G. and Deshpande, R. 1992. 'Relationships between providers and users of market research: the dynamics of trust within and between organizations', *Journal of Marketing Research*, 24(3): 314–328.

Morgan, R.M. and Hunt, S.D. 1994. 'The commitment-trust theory of relationship marketing', *Journal of Marketing*, 58(3): 20–38.

Morgan, R.M. 2000. 'Relationship marketing and marketing strategy', In Sheth, J.N. and Parvatiyar, A. (Eds.): *Handbook of Relationship Marketing*, Thousand Oaks: Sage, 481–504.

Morrow, J.L. Jr., Hansen, M.H. and Pearson, A.W. 2004. 'The cognitive and affective antecedents of general trust within cooperative organizations', *Journal of Managerial Issues,* 16 (1): 48–64.

Mukherjee, A. and Nath, P. 2003. 'A model of trust in online relationship banking', *International Journal of Bank Marketing*, 21(1): 5–15.

Mumvuma, T. 2002. *Understanding reform*: *The case of Zimbabwe.* Available from: https://www.gdnet.org/pdf2/gdn_library/global_research/Zimbabwe. Accessed: 3 December 2016.

Mungenda, O.M. and Mungenda, A.G. 2003. *Research methods: Qualitative and quantitative approaches*. Nairobi: ACTS Press.

Muranda, Z., 2006. 'Financial distress and corporate governance in Zimbabwean banks', *Corporate Governance,* 6 (5): 643-654

Mutasa, P. 2015. 'Bank closures: 1000 workers lose jobs', *Zimbabwe Independent,* 13 March 2015 Available from: http://www.theindependent.co.zw/2015/03/13/bank-closures-1-000-workers-lose-jobs (Accessed 17 April 2016)

Nau, D. 1995. 'Mixing methodologies: Can bimodal research be a viable post-positivist tool?',*The Qualitative Report*, 2 (3): 1–6.

Ndela, D. 2014. 'Banks hit by panic withdrawals', *The Financial Gazette* 19 October 2014. Available from: http://www.financialgazette.co.zw/banks-hit-by-panic-withdrawals/. Accessed: 22 May 2015.

Ndubisi, N.O. 2006. 'A structural equation modelling of the antecedents of relationship quality in the Malaysia banking sector', *Journal of Financial Services Marketing*, 11(1): 131–141.

Neuman, W.L. 2014. *Social research methods: Qualitative and quantitative approaches.* 7th edition. Upper Saddle River: Pearson Education.

Ngulube, P. 2005. 'Research procedures used by Master of Information Studies students at the University of Natal in the period 1982-2002 with special reference to their sampling techniques and survey response rates: a methodological discourse', *The International Information and Library Review*, 37(2): 127–143.

Nicholson, C.Y., Compeau, L.D. and Sethi, R. 2001. 'The role of interpersonal liking in building trust in long-term channel relationships', *Journal of the Academy of Marketing Science*, 29(1): 3–15.

Niemeyer, J. 2006. 'The regulatory framework for banks in the EU: An introduction', *Economic Review*, 1–14.

Nienaber, A., Hofeditz, M and Searle, R.H. 2014. 'Do we bank on regulation or reputation? A meta-analysis and meta-regression of organizational trust in the financial services sector', *International Journal of Bank Marketing*, 32(5): 367–407.

Nooteboom, B. 2002. *Trust: forms, foundations, functions, failures and figures*, Cheltenham: Edward Elgar.

Nyoka, C. 2015. 'Banks and the fallacy of supervision: the case for Zimbabwe, *Journal of Banks and Bank Systems*, 10(2).

Oh, H. and Parks, S.C. 1997. 'Customer satisfaction and service quality: a critical review of the literature and research implications for the hospitality industry', *Hospitality Research Journal* 20(3): 35–64.

Olorunniwo, F., Hsu, M.K. and Udo, G.J. 2006. 'Service quality, customer satisfaction, and behavioral intentions', *Journal of Services Marketing*, 20(1): 59–72.

Onwuegbuzie, A.J., and Johnson, R.B. 2006. 'The 'validity' issue in mixed methods research', *Research in the Schools*, 13(1): 48–63.

Opoku, R.A., and Akorli, P.A.K. 2009. 'The preference gap: Ghanaian consumers' attitudes toward local and imported products', *African Journal of Business Management*, 3(8): 350–357.

O'Reilly, C.A. and Chatman, J. 1986. 'Organizational commitment and psychological attachment: The effects of compliance, identification and internalization on prosocial behaviour,' *Journal of Applied Psychology*, 71. 492–499.

Orrù, M., Biggart, N.W. and Hamilton, G.G. 1997. *The economic organization of East Asian capitalism*, London: Sage.

Onwuegbuzie, A. J. and Collins, K.M.T. 2007. 'A typology of mixed methods sampling designs in social science research', *The Qualitative Report, 12*(2): 281–316.

Owens, L. 2012. 'Confidence in banks, financial institutions, and Wall Street, 1971-2011', *Public Opinion Quarterly*, 76 (1): 142–162.

Ozdemir, V.E. and Hewett, K. 2010. 'The effect of collectivism on the importance of relationship quality and service quality for behavioral intentions: A cross-national and cross-contextual analysis', *Journal of International Marketing,* 18(1): 41–62.

Pallant, J. 2013. *SPSS survival manual: A step-by-step guide to data analysis using IBM SPSS,* 4th Edition. Crows Nest: Allen & Unwin.

Palmatier, R.W. 2008. 'Interfirm relational drivers of customer value', *Journal of Marketing* (July): forthcoming.

Palmatier, R.W., Scheer, L.K. and Steenkamp, J.E.M. 2007. 'Customer loyalty to whom? Managing the benefits and risks of salesperson owned loyalty', *Journal of Marketing Research*, 44(2): 185–199.

Paswan, A. 2009. 'Confirmatory Factor Analysis and Structural Equations Modeling, An Introduction', Department of Marketing and Logistics. COB, University of North Texas, USA.

Pentz, C.D. 2011. 'Consumer ethnocentrism and attitudes towards domestic and foreign products: A South African study', Unpublished doctoral thesis, University of Stellenbosch, Faculty of Economic and Management Sciences, Stellenbosch.

Pfeffer, J. and Salancik, G.R. 2003. *The external control of organizations: A resource dependence perspective.* New York: Harper and Row.

Podnar, K. and Javernik, P. 2012. 'The effect of word of mouth on consumers' attitudes toward products and their purchase probability', *Journal of Promotion Management*, 18(2): 145–168.

Powell, D.M. and Meyer, J.P. 2004. 'Side-bet theory and the three-component model of organizational commitment', *Journal of Vocational Behavior*, 65. 157–177.

Powell, R.R. and Connaway, L.S. 2004. *Basic research methods for librarians*. London: Libraries Unlimited.

PriceWaterhouseCoopers. 2014. *Banking banana skins survey 2014.* Available from: https://www.pwc.com/im/en/industries/banking/assets/banking_bananaskins__may_2014.pdf .Accessed: 3 September 2016.

Quinlan, C., Babin, B., Carr, J., Griffin, M. and Zikmund, W. 2015. *Business research methods*. Hampshire: Cengage Learning EMEA, 55-65.

Randolph, J.J. 2009. 'A guide to writing the dissertation literature review. Practical assessment', *Research & Evaluation,* 3(13): 1–13.

Ravald, A., Grönroos, C., 1996. 'The value concept and relationship marketing', *European Journal of Marketing*, 30. 2. 19–30.

Reich, R. 2008. 'Government needs to rebuild trust in markets', *US News and World Report*, Available from: http://www.usnews.com/articles/opinion/2008/09/16/robert-reich-government-needs-to rebuild- trust-in-the-markets.html. Accessed: 11 July 2015.

Reichheld, F.F. and Sasser, J.W.E. 1990. 'Zero defections: quality comes to services', *Harvard Business Review*, 68(5): 105–11.

Reichheld, F.F. 2003. 'The one number you need to grow', *Harvard Business Review*, December, 46–54.

Reichheld, F.F. 2006. *The ultimate question: Driving good profits and true growth*. Boston: Harvard Business School Press.

Rempel, J.K., Holmes, J.G. and Zanna, M.P. 1985. 'Trust in close relationships', *Journal of Personnel Social Psychology,* 49(1): 95–112.

Reserve Bank of Zimbabwe. 2004. *Monetary policy statement in terms of the RBZ Act Chapter 22:15. Section 46*. Available from: http://www.rbz.co.zw/assets/corporate-governance-2004.pdf.Accessed: 12 March 2015.

Reserve Bank of Zimbabwe. 2005. *Monetary policy statement in terms of the RBZ Act Chapter 22:15. Section 46*. Available from: http://www.rbz.co.zw/assets/monetary-policy-2005pdf. Accessed: 12 March 2015.

Reserve Bank of Zimbabwe. 2009. *Monetary policy statement in terms of the RBZ Act Chapter 22:15. Section 46*. Available from: http://www.rbz.co.zw/assets/monetary-policy-2006.pdf. Accessed:: 12 March 2015.

Reserve Bank of Zimbabwe. 2011. *Monetary policy statement, In terms of the RBZ Act Chapter 22:15. Section 46* Available from: http://rbz.co.zw/assets/mps-july-2011.pdf. Accessed: 20 June 2015.

Reserve Bank of Zimbabwe. 2013. *Monetary policy statement. In terms of the RBZ Act Chapter 22:15. Section 46* Available from: http://www.rbz.co.zw/assets/jan-2013-mps.pdf. Accessed: 20 June 2015.

Reserve Bank of Zimbabwe. 2014. *Monetary policy statement. In terms of the RBZ Act Chapter 22:15. Section 46.* Available from: http://www.rbz.co.zw/assets/jan-2014-mps.pdf. Accessed: 20 June 2015.

Reserve Bank of Zimbabwe. 2015. *Monetary policy statement. In terms of the RBZ Act Chapter 22:15. Section 46.* Available from: http://www.rbz.co.zw/assets/monetary-policy-july-2015.pdf. Accessed: 10 November 2016.

Reserve Bank of Zimbabwe. 2016. *Monetary policy statement. In terms of the RBZ Act Chapter 22:15. Section 46.* Available from: http://www.rbz.co.zw/assets/monetary-policy-statement-september-2016-.pdf. Accessed: 10 November 2017.

Reserve Bank of Zimbabwe. 2017. *Monetary policy statement. In terms of the RBZ Act Chapter 22:15. Section 46.* Available from: http://www.rbz.co.zw/assets/2017-monetary-policy-statement-pdf. Accessed: 10 November 2017.

Reserve Bank of Zimbabwe. 2018. *Monetary policy statement. In terms of the RBZ Act Chapter 22:15. Section 46.* Available from: http://www.rbz.co.zw/assets/monetary-policy-february-2018-.pdf. Accessed: 10 February 2018.

Ring, P.S. 1996. 'Fragile and resilient trust and their roles in economic exchange', *Business & Society*, 35. 148–175.

Roberts-Lombard, M. 2012. 'Exploring the relationship between trust, commitment and customer loyalty through the intervening role of customer relationship management (CRM)', *African Journal of Business Management* Vol. 6 (10), pp. 3803-3816.

Roth, M.S. 1994. 'Enhancing consumer involvement in health care: The dynamics of control, empowerment, and trust', *Journal of Public Policy and Marketing*, 13(1): 115–32.

Rothstein, B. 2005. *Social traps and the problem of trust*, Cambridge: Cambridge University Press.

Rotter, J.B. 1967. 'A new scale for the measurement of interpersonal trust. *Journal of Personality*, 35. 651–665.

Rousseau, D.M., Sitkin, S.B., Burt, R.S. and Camerer, C. 1998. 'Not so different after all: A cross-discipline view of trust', *Academy of Management Review*, 23(3): 393–404.

Roy, S.K. and Shekhar, V. 2010a. 'Alternative models of trustworthiness of service providers', *The Journal of Global Marketing*, 23(5): 371–386.

Roy, S.K. and Shekhar, V. 2010b. 'Dimensional hierarchy of trustworthiness of financial service providers', *International Journal of Bank Marketing*, 28(1): 47–64.

Roy, S.K., Eshghi, A. and Shekhar, V. 2011. 'Determinants of trust and trustworthiness in retail banking: Evidence from India', *The Marketing Management Journal*, 20(1): 25.

Rubin, A. and Babbie, E. 2016. *Essential Research Methods for Social Work.* Fourth Edition. Cengage Learning Empowerment Series.

Sabel C.F., 1993. 'Studied trust: Building new forms of cooperation in a volatile economy', *Human Relations*, 46(9): 1133–1170.

Salam, A., Iyer, L., Palvia, P. and Singh, R. 2005. 'Trust in e-commerce', *Communications of the ACM*, 48(2): 72–77.

Salkind, N.J. 2018. *Exploring research*. 9th edition. Upper Saddle River: Pearson Education.

Sandada, M., and Magobeya, A. 2016. 'The determinants of consumer trust in the banking industry in Zimbabwe', *Studia Universitatis Babe-Bolyai Oeconomica*, 61(2).

Santos, C. P. D, and Basso, K. 2012. Do ongoing relationships buffer the effects of service recovery on customers' trust and loyalty? *International Journal of Bank Marketing*, Vol. 30(3): 168-192.

Saparito, P.A., Chen, C.C. and Sapienza, H.J. 2004. 'The role of relational trust in bank–small firm relationships', *Academy of Management Journal*, 47(3): 400–410.

Saunders, M., Lewis, P. and Thornhill, A. 2016. *Research methods for business students*. 7th edition, Harlow: Pearson Education.

Schiffman, L.G. and Kanuk, L.L. 2004. *Consumer behaviour.* 8th edition. Upper Saddle River: Pearson Prentice Hall.

Schindler, P.L. and Thomas, C.C. 1993. 'The structure of interpersonal trust in the workplace', *Psychological Reports*, 73. 563–573.

Schoorman, F.D., Mayer, R.C., and Davis, J.H. 2007. 'An integrated model of organizational trust: Past, present, and future', *The Academy of Management Review*, 32. 334–354.

Schumacker, R. E and Lomax R. G. 2004. *A Beginner's Guide to Structural Equation Modeling.* Second Edition, and Lawrence Erlbaum Associates.

Seale, C. 1999. *The quality of qualitative research*, London: Sage.

Sekhon, H., Roy, S.K., Shergill, G. and Pritchard, A.R. 2013. 'Modelling trust in service relationships: a transnational perspective', *Journal of Services Marketing*, 27(1): 76–86.

Seligman, A. 1997. *The problem of trust*. Princeton: Princeton University Press.

Selnes, F. and Sallis, J. 2003. 'Promoting relationship learning', *Journal of Marketing*, 67(3): 80.

Shainesh, G. 2012. 'Effects of trustworthiness and trust on loyalty intentions: validating a parsimonious model in banking', *International Journal of Bank Marketing*, 30(4): 267–279.

Sharma, N., Young, L. and Wilkinson, I. 2006. 'The commitment mix: Dimensions of commitment in international trading relationships in India', *Journal of International Marketing*, 64–91.

Sheth, J.N. and Parvatiyar, A. 2000. *Handbook of relationship marketing*, Thousand Oaks: Sage.

Shim, S., Serido, J. and Tang, C. 2013. 'After the global financial crash: individual factors differentiating young adult consumers' trust in banks and financial institutions', *Journal of Retailing and Consumer Services*, 20(1): 26–33.

Silverman, D. 2001. *Interpreting qualitative data: Methods for analysing talk, text and interaction:* 2nd edition. London: Sage.

Sirdeshmukh, D., Singh, J. and Sabol, B. 2002. 'Consumer trust, value, and loyalty in relational exchanges'*, Journal of Marketing*, 66(1): 15–37.

Sitkin, S. and Beis, R. (Eds.). 1994. *The legalistic organization*. Thousand Oaks: Sage, 19–49.

Sitkin, S., and Roth, N. L. 1993. 'Explaining the limited effectiveness of legalistic 'remedies' for trust/distrust', *Organizational Science*, 4. 367–392.

Siu, N.Y.M., Zhang, T.J.F., Dong, P. and Kwan, H.Y. 2013. 'New service bonds and customer value in customer relationship management: The case of museum visitors', *Tourism Management*, 36. 293–303.

Siyachitema, R. 2014. *Banking crisis set to further erode depositor confidence.* Available from: http://www.sundaynews.co.zw/banking-crisis-set-to-further-erode-depositor-confidence/. Accessed: 10 June 2016.

Smith, J.B. and Barclay, D.W., 1997. 'The effects of organizational differences and trust on the effectiveness of selling partner relationships', *Journal of Marketing*, 61(1): 3–21.

Snyder, J.L. and Cistulli, M.D. 2011. 'The relationship between workplace e-mail privacy and psychological contract violation, and their influence on trust in top management and affective commitment', *Communication Research Reports*, 28: 121–129.

Spekman, R.E. 1988. 'Perceptions of strategic vulnerability among industrial buyers and its effect on information search and supplier evaluation', *Journal of Business Research*, 17(4): 313–327.

Spekman, R.E., Isabella, L.A. and MacAvoy, T.C. 2000. *Alliance competence: Maximizing the value of your partnerships*. New York: John Wiley & Sons.

Stern, L. W. and El-Ansary, A.I. 1992. *Marketing channels*. 4th edition. Englewood Cliffs: Prentice Hall.

Stiglitz, J.E. 2010. *Freefall: America free markets and the sinking of the world economy*, New York: W.W. Norton & Company.

Stiglitz. J. 2008. *The fruit of hypocrisy.* Available from:https://www.thegurdian.com/comment isfree/2008/sep/16/economics.wallstreet. Accessed: 3 March 2015.

Sunny Hu, H.H., Huang, C.T. and Chen, P.T. 2010. 'Do reward programs truly build loyalty for lodging industry?' *International Journal of Hospitality Management*, 29(1): 128–135.

Sunikka, A., Peura-Kapanen, L. and Raijas, A. 2010. 'Empirical investigation into the multi-faceted trust in the wealth management context', *International Journal of Bank Marketing*, 28(1): 65–81.

Sztompka, P. 1999. *Trust: A sociologic theory.* Cambridge: Cambridge University Press.

Tabachnick B.G. and Fidell, L.S. 2014. *Using multivariate statistics*. 6th edition. Upper Saddle River: Pearson.

Tashakkori, A. and Teddlie, C. 2009. *Foundations of mixed methods research: Integrating quantitative and qualitative approaches in the social and behavioral sciences.* Thousand Oaks: Sage.

Tasic, S. and Feruh, M.B. 2012. 'Errors and issues in secondary data used in marketing research', *The Scientific Journal for Theory and Practice of Socioeconomic Development*, 1. 326–335.

Taylor-Powell, E. and Renner, M. 2003. *Analysing qualitative data*. Program Development and Evaluation (G 3658-12). Wisconsin: University of Wisconsin.

Thiagaragan, T., Zairi, M. and Dale, B.G. 2001. 'A proposed model of TQM implementation based on an empirical study of Malaysian industry', *International Journal of Quality & Reliability Management,* 1 (3): 289–306.

Vanhala, M., Puumalainen, K. and Blomqvist, K. 2011. 'Impersonal trust: the development of the construct and the scale', *Personnel Review*, 40(4): 485–513.

Vickerstaff, S., Macvarish, J., Taylor-Gooby, P., Loretto, W. and Harrison, T. 2012. 'Trust and confidence in pensions: A literature review*', Working Paper 108.* London: Department for Work and Pensions*,* 20.

Walter, A., Holzle, K. and Ritter, T. 2002. 'Relationship functions and customer trust as value creators in relationships: A conceptual model and empirical findings for the creation of customer value', *Proceedings of the 18th IMP conference*, Dijon, France.

Wanninayake W.M.C.B, and Chovancová, M. (2012). Consumer ethnocentrism and attitudes towards foreign beer brands: With evidence from Zlin Region in the Czech Republic. *Journal of Competitiveness, 4*(2), 3-19.

Wang, Y.K., and Datta, P. 2006. 'Understanding IS continuance: A technology commitment perspective', *Symposium conducted at the meeting of the ICIS 2006.*Available from: http://aisel.aisnet.org/icis2006/77. Accessed 20 January 2017.

Wathne, K.H. and Heide, J.B. 2000. 'Opportunism in inter-firm relationships: Forms, outcomes, and solutions'*, Journal of Marketing*, 64(4): 36–51.

Weitz, B.A. and Sandy D.J. 1995. 'Relationship marketing and distribution channels', *Journal of the Academy of Marketing Science*, (Fall): 305–320.

Welter, F. and Smallbone, D. 2011. 'Institutional perspectives on entrepreneurial behaviour in challenging environments', *Journal of Small Business Management*, 49(1): 107–125.

Whitley, R. 1992. *Business systems in East Asia: firms, markets and societies*, London: Sage.

Williamson, E. 1993. 'Calculative-ness, Trust and Economic Organization'', *Journal of Law and Economics*, 30. 131–145.

Williamson, O. 1985. *The economic institutions of capitalism*, London: Free Press.

Wilson, A., Zeithaml, V.A., Bitner, M. and Gremler, D.D. 2012. *Services marketing: integrating customer focus across the firm.* 2nd Edition. Maidenhead: McGraw-Hill.

Wilson, D. 1995. 'An integrated model of buyer-seller relationships', *Journal of Academy of Marketing Science*, 23(Fall): 335–345.

Wong, P.S.P., Cheung, S.O. and Ho, P.K.M. 2005. 'Contractor as trust initiator in construction partnering – prisoners' dilemma perspective', *Journal of Construction Engineering and Management*, 131(10): 1045–1053.

Worton, L. 2017. *Zimbabwe 'bond notes' stoke fears of hyperinflation's return* Available from: http://globaljournalist.org/2017/02/zimbabwe-bond-notes-stoke-fears-hyperinflations-return/. Accessed: 10 December 2017.

Xie, Y. and Peng, S. 2009. 'How to repair customer trust after negative publicity: The roles of competence, integrity, benevolence, and forgiveness', *Psychology & Marketing*, 26(7): 572–589.

Yee, R.W.Y., Yeung, A.C.L. and Edwin Cheng, T.C. 2010. 'An empirical study of employee loyalty, service quality and firm performance in the service industry', *International Journal of Production Economics*, 124(1): 109–120.

Yin, R. 2013. *Case study research: Design and methods.* 3rd edition. Los Angeles: Sage.

Zait, A. and Bertea, P.E. 2014. 'Financial literacy - Conceptual definition and proposed approach for a measurement instrument', *The Journal of Accounting and Management*, 3, 37-42.

Zeithaml, V.A., Berry, L.L. and Parasuraman, A. 1996. 'The behavioural consequences of service quality', *Journal of Marketing*, 60. 31–46.

Zhao, A.L., Koenig-Lewis, N., Hammer-Lloyd, S. and Ward, P. 2010. 'Adoption of internet banking services in China: is it all about trust?', *The International Journal of Bank Marketing*, 1(1): 7–26.

Zikmund, W.G., and Babin, B.J. 2007. *Marketing research*. Delhi: Cengage Learning.

Zimbabwe National Statistics Agency (ZIMSTAT). 2014. *Labour Force Survey. Zimbabwe National Statistics*. Available from:http://www.zimstata.co.zw//sites/default/files/1mg/labour_2014.pdf. Accessed: 4 February 2018

Zolait, A., Mattila, M. and Sulaiman, A. 2008. 'The effect of user's informational-based readiness on innovation acceptance', *International Journal of Bank Marketing*, 27(1): 76–100.

Zucker, L.G. 1986. 'Production of trust: institutional sources of economic structure 1840-1920', In Staw, B.M. & Cummings, L.L. (Eds.). *Research in Organizational Behavior*, 8, Greenwich: JAI Press, 53–111.

APPENDICES

APPENDIX A – INTRODUCTORY LETTER

Graduate School of Business Leadership, University of South Africa PO Box 392 Unisa 0003 South Africa
Cnr Janadel & Alexandra Avenue Midrand 1685 Tel: +27 11 652 0000 Fax: +27 11 652 0299
Email: sbl@unisa.ac.za Website: www.sblunisa.ac.za

PARTICIPANT INFORMATION SHEET

30 September 2016

The Multi-Dimensionality of Trustworthiness of Banks Midst a Confidence Crisis: The Case of Retail Banks in Zimbabwe

Dear Prospective Participant,

My name is Matildah Zungunde and I am doing research under the supervision of Dr Francois du Toit, a senior lecturer in the Department of Marketing and Strategy towards a Doctor of Leadership Degree at the University of South Africa School of Business Leadership. We are inviting you to participate in a study entitled: **The Multi-Dimensionality of Trustworthiness of Banks Midst a Confidence Crisis: The Case of Retail Banks in Zimbabwe**

The aim of this study is to investigate trustworthiness dimensions of banks that drives consumer trust in a banking sector that is experiencing a confidence crisis using the Zimbabwean banking sector as a point of reference.

You have been randomly chosen to participate in this study together with other 300 participants because you are a client of one of the four banks that are participating in this study. The study involves responding to a questionnaire pertaining to your attitudes and perceptions about bank trustworthiness issues regarding your bank. The questionnaire is expected to take approximately 15-20 minutes to complete. There are no trick questions in this survey and there are no right or wrong answers. Your name or any identifying characteristics will not be available to anyone, other than my supervisor and me, at any point. You may also be selected to participate in the second phase involving semi structured interview which will be videotaped, you will be asked to give more details regarding issues affecting trustworthiness in your bank. The interview is expected to take approximately 30 minutes.

Being in this study is voluntary and you are under no obligation to consent to participation. If you do decide to take part, you will be given this information sheet to keep and be asked to sign a written consent form. The consent forms will be kept separate from the questionnaires. Please briefly examine the questionnaire before signing the consent form. There are no financial rewards or incentives to participate in this study. This study has received written approval from the Research Ethics Committee of the UNIOSA School of Business Leadership and a copy of the

First in Leadership Education in Africa

Graduate School of Business Leadership, University of South Africa PO Box 392 Unisa 0003 South Africa
Cnr Janadel & Alexandra Avenue Midrand 1685 Tel: +27 11 652 0000 Fax: +27 11 652 0299
Email: sbl@unisa.ac.za Website: www.sblunisa.ac.za

approval letter can be obtained from the researcher if you so wish. You are free to withdraw at any time prior to returning the questionnaire and without giving a reason, however, please note that it will not be possible to withdraw once you have submitted the questionnaire.

The study is likely to benefit all the stakeholders involved in the banking industry as improved bank trustworthiness is likely to restore customer confidence in the banking industry which may in turn result in economic prosperity in a country.

There are no foreseeable risks and harm to potential participants. All information obtained during the study will be confidential and your name will not be recorded anywhere and no one will be able to connect you to the answers you give. Your answers will be given a fictitious code number or a pseudonym and you will be referred to in this way in the data, any publications, or other research reporting methods such as conference proceedings. Thus, individual participants will not be identifiable in such reports. Your answers may be reviewed by people responsible for making sure that research is done properly, including a transcriber, external coder, and members of the Research Ethics Committee. Otherwise, records that identify you will be available only to people working on the study, unless you give permission for other people to see the records.

Hard copies of your answers will be stored by the researcher for a period of 5 years in a locked cabinet at the researcher' home office for future research or academic purposes; electronic information will be stored on a password protected computer. Thereafter, all computer records will be deleted and all paper work will be shredded. Future use of the stored data will be subject to further Research Ethics Review and approval.

If you would like to be informed of the final research findings and should you require any further information or want to contact the researcher about any aspect of this study, please contact Matildah Zungunde : matildahz@utho.co.za., +27 745854150. Should you have concerns about the way in which the research has been conducted, you may contact Dr Francois Du Toit: dutoitf@unisa.ac.za, +27 116520326.

Thank you for taking time to read this information sheet and for participating in this study.

Thank you.

Matildah Zungunde

APPENDIX B – SURVEY QUESTIONNAIRE

Dear respondent:

The following questions relate to your personal evaluation of the current bank you are dealing with and we would like you to give us an indication of your perceptions of that bank. Please spare approximately 15- 20 minutes to complete this questionnaire. All the information you provide will be treated in confidence. The questionnaire can be handed back to the researcher upon completion, alternatively you can e-mail it to the researcher: ***matildahz@utho.co.za***

SECTION A
Demographic Information of the Respondent

*This section will require you to provide your personal profile as the key respondent that will help in interpreting the results of this survey. Please answer the following questions to the best of your ability by crossing **(X)** in the relevant box.*

1.1 Your Gender

Male	
Female	

1.2 Your Age Group

Under 20 years	
20-25 years	
26-35 years	
36-45 years	
46-55 years	
56-65 years	
66 years and over	

1.3 Your highest formal qualification

Diploma	
Bachelors	
Masters	
Doctorate	
Other	

1.4 Which bank do you bank with?

Stanbic Bank	
Steward Bank	
ZB Bank	
CABS	

1.6 Do you have more than one bank account?

YES	
NO	

1.7 Please state if your account is a personal account or a business account

Personal Account	
Business Account	
Both Personal and Business	

1.8 How long have you been with your bank?

Less than 1 year	
1-5 years	
5-10 years	
10-15years	
15-20 years	
20-25 years	
Over 25 years	

SECTION B

Your Assessment of the Bank

*Each of the following statements relate to your personal rating of your bank. Please read each of the following statements (Questions A1-A27) and then indicate the extent to which you believe the statement to be relevant to your Bank. Please indicate by crossing **(X)** on the number that mostly strongly reflects your feeling in relation to your bank using the scale below*

Strongly disagree (1) Disagree (2) Neutral (3) Agree (4) Strongly Agree (5)

Question 1

		1	2	3	4	5
B1	My bank is knowledgeable					
B2	My bank can be relied upon to give honest advice					
B3	My bank is efficient					
B4	My bank has the information it needs to conduct business					
B5	My bank shows high integrity					
B6	My bank is honest					
B7	My bank conducts transactions fairly					
B8	My bank acts in the best interest of the customer					
B9	My bank keeps its word					
B10	My bank is consistent in what it does					
B11	My bank has the same values as me					
B12	My bank does what it takes to make me happy					
B13	My bank has the same concerns as me					
B14	My bank is receptive to my needs					
B15	My bank Is responsive when contacted					
B16	My bank shows respect for the customers					
B17	My bank treats its customers fairly					
B18	My bank competently handles all my requests					
B19	My bank communicates clearly					
B20	My bank communicates regularly					

B21	My bank informs me regularly on new developments					
B22	My bank acts as I would					
B23	My bank informs me immediately of any problems					
B24	I believe my bank is very secure					
B25	I believe my bank complies with the banking legal framework					
B26	I believe my funds are safe in my bank					
B27	I believe the legal framework in the country protects the depositor.					

Question 2

*Each of the following statements relate to your personal rating of your bank. Please read each of the following statements (Questions B1-B4) and then indicate the extent to which you believe the statement to be relevant to your Bank. Please indicate by crossing **(X)** on the number that mostly strongly reflects your feeling in relation to your bank using the scale below*

Strongly disagree (1) Disagree (2) Neutral (3) Agree (4) Strongly Agree (5)

		1	2	3	4	5
C1	My bank has a reputation for being honest					
C2	My bank has a reputation for looking after its customers					
C3	My bank has a reputation for being reliable					
C4	Overall 1 feel my bank is trustworthy					

Question 3

*Each of the following statements relate to your personal rating of your bank. Please read each of the following statements (Questions C1- C-8) and then indicate the extent to which you believe the statement to be relevant to your Bank. Please indicate by crossing **(X)** on the number that mostly strongly reflects your feeling in relation to your bank using the scale below*

Strongly disagree (1) Disagree (2) Neutral (3) Agree (4) Strongly Agree (5)

		1	2	3	4	5
D1	I identify myself with the bank mission and activities					
D2	I have in myself a sense of belonging to the given bank					
D3	I like to cooperate with the bank staff officers					
D4	I would be very happy to spend the rest of my life banking with my bank					
D5	I intend to continue using my bank in the future					
D6	I will try new products and services that are provided by my bank					
D7	I am fully ready to recommend my bank to everybody who might ask					
D8	I will say positive things to other people about the services provided by my bank					

SECTION C

Question 4

In your opinion, please describe what concerns you the most about your bank and why.

Would you be interested in taking part in a follow-up interview, if yes please add your e-mail

……

Thank you for your time and participation.

APPENDIX C – INTERVIEW GUIDE

SECTION A: DEMOGRAPHIC INFORMATION OF THE RESPONDENT

1. What is your gender?
2. What is your age?
3. What is your highest formal qualification?
4. Which bank do you bank with?
5. Please state if your account is a personal account or a business account?
6. How long have you been with your bank?

SECTION B: RESPONDENT ASSESSMENT OF THE BANKING SECTOR IN ZIMBABWE

1. In your opinion, do you trust your bank and what do you regard as the most critical issues affecting your ability to trust or not to trust your bank? Which stakeholders do you regard as crucial in restoring trust in the Zimbabwean banking sector?
2. In the survey, the majority of the respondents indicated that they were not happy with the level of structural assurance in the banking sector. Do you agree and if so, why?
3. In your opinion, do you believe there is effective communication from your bank and from the banking sector in general? If not, what form of communication do you expect and from whom?
4. Do you believe your bank is competent? Does competence of your bank affect your bank trustworthiness, if so why?
5. To what extent is the integrity and consistency of your bank important to you? Does the integrity and consistency of your bank influence your trust in the bank?
6. Does the benevolence of banks towards customers increase your trust in the banks? Please provide reasons for your answer.
7. Do you believe that your bank shares the same values as you? Please specify what you consider as important value alignment aspects you expect from your bank.
8. Do you believe you will stay committed to your bank even if better banking facilities are presented to you? Please specify the reason for your answer.
9. Based on your current level of trust in your bank, would you recommend your bank to other potential customers? Do you intend to continue using your bank in the event that you are presented with a better alternative bank?
10. Do you have any other comments, or burning issues that we have not covered in the interview up to now?

Thank you very much for the time taken to participate in the interview

APPENDIX D – ETHICAL CLEARANCE LETTER

Graduate School of Business Leadership, University of South Africa, PO Box 392, Unisa, 0003, South Africa
Cnr Janadel and Alexandra Avenues, Midrand, 1685, Tel: +27 11 652 0000, Fax: +27 11 652 0299
E-mail: sbl@unisa.ac.za Website: www.unisa.ac.za/sbl

SCHOOL OF BUSINESS LEADERSHIP
RESEARCH ETHICS REVIEW COMMITTEE (GSBL CRERC)

11 November 2016

Ref #: 2016_SBL_DBL_031_FA
Name of applicant: Mrs M Zungunde
Student #: 78838444

Dear Mrs Zungunde

Decision: Ethics Approval

Student: Mrs M Zungunde, matildahz@utho.co.za, 074 585 4150

Supervisor: Dr F du Toit, dutoitf@unisa.ac.za, 011 652 0326

Project Title: The Multi-Dimensionality of Trustworthiness of banks Midst a confidence crisis: The case of retail banks in Zimbabwe

Qualification: Doctorate in Business Leadership (DBL)

Thank you for applying for research ethics clearance, SBL Research Ethics Review Committee reviewed your application in compliance with the Unisa Policy on Research Ethics.

Outcome of the SBL Research Committee:
Approval is granted for the duration of the Project

The application was reviewed in compliance with the Unisa Policy on Research Ethics by the SBL Research Ethics Review Committee on the 09/11/2016.

The proposed research may now commence with the proviso that:

1) The researcher/s will ensure that the research project adheres to the values and principles expressed in the UNISA Policy on Research Ethics.
2) Any adverse circumstance arising in the undertaking of the research project that is relevant to the ethicality of the study, as well as changes in the methodology, should be communicated in writing to the SBL Research Ethics Review Committee.

45 years Building leaders who go beyond

SBL GRADUATE SCHOOL OF BUSINESS LEADERSHIP UNISA

Graduate School of Business Leadership, University of South Africa, PO Box 392, Unisa, 0003, South Africa
Cnr Janadel and Alexandra Avenues, Midrand, 1685. Tel: +27 11 652 0000, Fax: +27 11 652 0299
E-mail: sbl@unisa.ac.za Website: www.unisa.ac.za/sbl

3) An amended application could be requested if there are substantial changes from the existing proposal, especially if those changes affect any of the study-related risks for the research participants.
4) The researcher will ensure that the research project adheres to any applicable national legislation, professional codes of conduct, institutional guidelines and scientific standards relevant to the specific field of study.

Kind regards,

15/11/2016

Prof R Ramphal
Chairperson: SBL Research Ethics Committee
011 – 652 0363 or ramphrr@unisa.ac.za

16/11/2016

Dr R Mokate
CEO and Executive Director: Graduate School of Business Leadership
011- 652 0256/mokatrd@unisa.ac.za

45 Building leaders who go beyond

SBL GRADUATE SCHOOL OF BUSINESS LEADERSHIP UNISA

APPENDIX E – DECLARATION OF PROFESSIONAL EDIT

Blue Diamonds Professional Services (Pty) Ltd
Enhancing your brilliance
Tel: 031 916 1420
Fax: 086 627 7756 Email: jaybee@telkomsa.net
Website: www.jaybe9.wix.com/bluediamondsed

26 February 2018

Declaration of professional edit

THE MULTI-DIMENSIONALITY OF TRUSTWORTHINESS OF BANKS MIDST A CONFIDENCE CRISIS: THE CASE OF RETAIL BANKS IN ZIMBABWE

By

MATILDAH ZUNGUNDE

I declare that I have edited and proofread this thesis. My involvement was restricted to language usage and spelling, completeness and consistency, referencing style and formatting of headings, captions and Tables of Contents. I did no structural re-writing of the content.

I am qualified to have done such editing, being in possession of a Bachelor's degree with a major in English, having taught English to matriculation, and having a Certificate in Copy Editing from the University of Cape Town. I have edited more than 100 Masters and Doctoral theses, as well as articles, books and reports.

As the copy editor, I am not responsible for detecting, or removing, passages in the document that closely resemble other texts and could thus be viewed as plagiarism. I am not accountable for any changes made to this document by the author or any other party subsequent to my edit.

Sincerely,

JBaumgardt

Dr Jacqueline Baumgardt
Member, Professional Editors Guild

Blue Diamonds Professional Services (Pty) Ltd (Registration Number 2014/092365/07)
Sole Director: J Baumgardt