PROBLEM SOLVING: A PROCESS OR A PRODUCT? A MATHEMATICS PERSPECTIVE

Apostolos Giannakopoulos
University of South Africa
South Africa
gianna@unisa.ac.za

Luneta Kakoma
University of Johannesburg
South Africa
kluneta@uj.ac.za

ABSTRACT–Problem solving in any field is recognised as a prerequisite for any advancement in knowledge. In South Africa it is one of the seven critical outcomes (SAQA, 1997) while with the introduction of the Curriculum and Assessment Policy Statement (CAPS, 2011, p.5) it is stated that the learner should be able to " identify and solve problems and make decisions using critical and creative thinking. Problem solving is, to a greater or a lesser extent, in all fields, from symbols, to variables, to equations, to logic, to critical thinking. Therefore it stands to reason that mathematical principles and learning cannot be divorced from any field. Literature treats problem solving as a process. A number of problem solving models have been created from the simplest 5 step process of Polya (1973) to Sternberg (2002) more comprehensive model. However Giannakopoulos (2012) found that problem solving should also be treated as a product of a number of cognitive processes prerequisites to solve a problem. This paper will show that if problem solving is treated as a product as well it forces the solver to apply higher order thinking skills and thus understanding is promoted which increases the success in problem solving.

Keywords: Problem Solving; Critical Thinking; Higher Education; Mathematics.

1. INTRODUCTION

Progress of any nation depends, among many other factors, on its capacity to overcome obstacles which stand on the way to achieve a goal. In this context a problem could be viewed as an obstacle (Polya, 1973). Human beings have been solving problems since the beginning of time and as a result progress has been made. The difference between the remote past and the present is that initially life was relatively simple and as problems were solved, mostly through intuition, more knowledge was gained. As the world became more complex and knowledge was increasing at leaps and bounds intuition was insufficient. Gained knowledge had to be recorded and stored for future use else "re-invention of the wheel" would have been a common thing. In Mathematics, in order to assist learners, many algorithms were invented which are part of the 'problem solving tools' of the learner. Perhaps this is where failure by many learners to solve problems might have its root as it will be argued later in the paper.

Problem solving in any field is recognised as a prerequisite for any advancement in knowledge. For example in South Africa it is one of the seven critical outcomes (SAQA, 1997) of education together with critical thinking while with the introduction of the Curriculum and Assessment Policy Statement (CAPS , 2011, p.5) it is stated that the learner should be able to " identify and solve problems and make decisions using critical and creative thinking." Many authors (Barak, Ben-Chai & Zoller, 2007; Halpern, 1998; Pushkin, 2007) agree that an overwhelming factor that contributes to academic success in a tertiary institution is the ability to think critically and solve problems. As a systematic way to problem solving was initiated in mathematics by the great mathematician George Polya (1973) (the father of problem solving), more detailed and comprehensive ways in problem solving have been developed (see, Sternberg, 2002). Problem solving has been viewed in many different ways. Green and Gilhooly (2005, p.347) saw that "Problem solving in all its manifestations is an activity that structures everyday life in a meaningful way". For Martinez (2006, p.2) problem solving

"is the pursuit of a goal when the path to that goal is uncertain. In other words, it's what you do when you don't know what you're doing."

It can be argued that mathematics is involved to a greater or a lesser extent in all fields, from symbols, to variables, to equations, to logic, to critical thinking. It may be, therefore, reasonably assumed that mathematical principles and learning cannot be divorced from any field. It Mathematics is not just the use of formulae, performing complex mathematical operations, modeling a solution and so on. Mathematics is underlined by cognitive functions which are used analogously in non-mathematical situations. For example the same mathematical principles govern a pump and a heart. However the problem solver has to see that analogy and more often than not (s)he fails to see that analogy.

At the same time, problems with the learning of problem solving in mathematics tend to distort problem solving in other areas. If problem solving is perceived as a process, a kind of algorithm, instrumental 'surface learning', void of any understanding takes place (Giannakopoulos, 2012). This is not only true in mathematics but even in some learning organisations. For Gray (2001) for example one of the main reasons is that the employees of an organisation are not given effective knowledge support which assists them to identify the cause of the problem but rather the effect. As a result when employees are faced with similar situation they fail to solve the problem. If the employees fail to solve similar problems that occur periodically what could happen when employees are faced with unstructured complex dissimilar problems? This led Giannakopoulos (2012) to re-visit the problem solving theories (Polya, 1973; Sternberg, 2002) and establish that problem solving was predominantly a product of a number of cognitive functions, critical thinking being one of them. Giannakopoulos (2012) also claimed that the problem with Mathematics is that it is 'a problem' on its entirety. Thus before you use mathematics you have to 'unlock' its essence.

2. MATHEMATICS AND PROBLEM SOLVING

Mathematics can be considered as a very concise and precise and 'absolute subject', allowing no room for multiple interpretations or use of redundant words, which means that almost every word or symbol in a mathematical expression conveys meaning. Missing one word or a symbol could lead to misinterpretation or misunderstanding (Zevenbergen, 2001: 17). Mathematics is abstract from the start since numbers are abstract symbols (Rodd, 2002). To understand mathematics one must be able to 'concretise the abstract', to convert the implicit to explicit (Giannkopoulos, 1991). This is also illustrated by the statement made by John Polkinghorne that "Mathematics is the abstract key which turns the lock of the physical universe" (Azquotes, n.d). Mathematics is a subject whereby problem solving forms the essence of knowledge acquisition (Hyde, 2007; Skemp, 1977).

Schaffler (1999: 1-6) states that, mathematics maybe understood to represent 'internal' logical relationships among concepts, or very abstract, though still empirical, generalisations based upon experiences. Mathematical truths are not dependent on experience, though an awareness of them may be suggested by experience. These aspects about the nature of mathematics not only makes mathematics knowledge a powerful tool to solve problems in the sciences such as physics, chemistry, all types of engineering (natural empirical sciences) but the various cognitive functions that are developed in the individual are analogous to a 'master key' that opens all doors.

What has been kind of a riddle for many centuries is if mathematics is so powerful and a necessary tool for the progress of the world why only few people understand it and can use it? Perhaps the answer to this question could lie on either its structure (Mathematics is a problem in its essence and it is abstract from the start) or the fact that mathematics demands the simultaneous presence of many different types of knowledge such as, conceptual, procedural, schematic and declarative as defined by Shavelson, Ruiz-Primo and Wiley (2005) and others (for examples, see Groth & Bergner,

2006; Kwon, Allen & Rasmussen, 2005; Pushkin, 2007). Many factors have been identified over the years about the learning of mathematics. But this paper is based on the assumption that the problem solver does possess the necessary knowledge to solve By reviewing the literature on PS and CT it appears that a confusion seems to arise.

3. PROBLEM SOLVING (PS) AND CRITICAL THINKING (CT)

By reviewing the literature on PS and CT it appears that a confusion seems to arise, analogous to the 'chicken and the egg' paradox. Is CT part of problem solving, a necessary condition or skill, a pre-condition or is problem solving one aspect of CT? This confusion is highlighted by Papastephanou and Angeli (2007) when they wonder whether CT it is either a form of problem solving, a part of problem solving, or should include problem solving. Martinez (2007) says that problem solving and critical thinking can be seen as complementary. For Sternberg (1986) and Leader and Middleton (2004) problem solving is one aspect of enhancing CT, solving ill-structured problems which are encountered in everyday practice (Jonassen, 1997, cited in Leader & Middleton, 2004), can furnish students with activities that strengthen attitude and accessibility from memory.

Sternberg (1986) and Leader and Middleton (2004) assume the stand that the one construct, say PS, enhances the other, CT, and vice versa. That is the more problems are solved successfully the greater the enhancement of CT. The more CT is enhanced the greater the ability to solve more complex problems. Before any argument arises it is necessary to discuss briefly CT. Although there is no universally acceptable definition of CT, a number of indicators have been accepted as prerequisites to CT by a number of authors (Fisher, 2001; Halpern, 1997; McPeck, 1990; Sternberg, 2002; Walsh & Seldomridge, 2006). Among these are Bloom's (1979) criteria (information, comprehension, application, synthesis and analysis and evaluation), decision making, classifying, making judgments and paying attention to detail. In mathematics when a learner is confronted with a problem at any level of mathematics (s)he needs to act upon the problem and solve it. Different problems require different types of thinking and different types of knowledge. The approach used to solve the problem could be 'instrumental' (algorithmic) or relational (Skemp, 1977). The former relies on memory and 'surface learning' the latter on understanding. It is argued here that promotion of algorithmic solution to a problem is based on treating problem solving as a process (a necessary but not a sufficient condition to solve a problem) or applying high cognitive skills such as critical thinking to solve the problem, thus problem solving is the product of such application**.**

4. PROBLEM SOLVING: A PROCESS OR A PRODUCT?

It is suggested that problem solving features implicitly (Giannakopoulos, 2012: 271) to be the product of three main constructs: critical thinking (CT), acquisition of knowledge (KN) and transfer/ application (AP) of such knowledge to similar or novel situations (see Figure 1). It is either 'problem solved', the product or 'problem not solved' which means the processes used were either insufficient or there was lack of certain cognitive functions or knowledge that could not achieve the desirable result or goal. Then problem solving becomes an iterative process till the goal, the desirable product is achieved. In order to gain a better understanding of problem solving whether it is a process, a product or both, one can look at the development of various problem solving models. Starting with the attributes of a problem (Green & Gillhouly, 2005; Halpern, 1997):

Start→method→goal

A problem has a starting point, that is, awareness there is a problem to be solved; a method is chosen, that is, a way to get to the goal; and, a goal to be achieved or that a problem is solved (Green & Gilhouly, 2005; Halpern, 1997). The first step could be the most important one since, not understanding the problem, having misconceptions, not realizing the simplicity or complexity of the problem (i.e., treat a complex problem as a simple problem and vice versa), having insufficient

knowledge and so on the goal may never be achieved. Once the problem has been identified, the right if not the best method has to be chosen to achieve the goal. Here again, different types of knowledge, experience and heuristics come to the fore. Lack of any of them may result in the process being terminated.

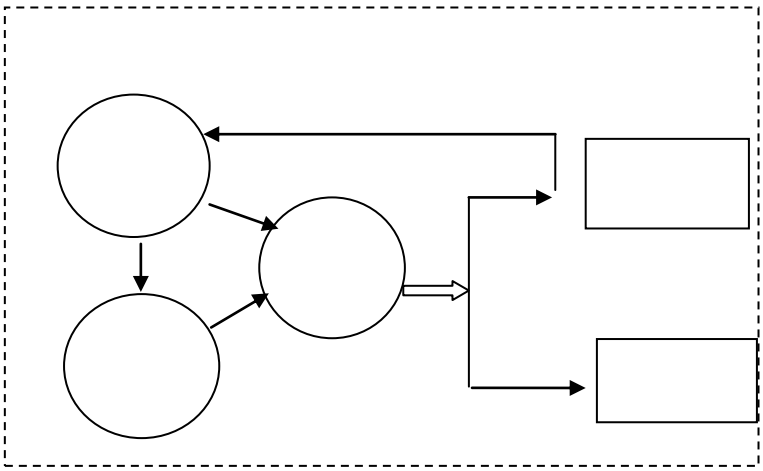

Figure 2: A problem solving model (adapted from Giannakopoulos 2012, 33)

Finally is the goal; the goal might be achieved (problem solved) or not, or assumed to have been achieved. This is where evaluation of the result is necessary. Does the answer make sense? What needs to be emphasised here is that in all three steps critical thinking is a prerequisite since all steps require analysis, synthesis, decision making, paying of attention to detail and so on.

This process was improved by Polya (1973) when he was the first to develop a problem solving model, a four step process:

Step 1: Understanding the problem
Step 2: Devise a plan
Step 3: Carry out the plan
Step 4: Looking back (evaluating)

This is similar to the above simple model but the emphasis is on understanding the problem. Since Polya (1973) many other authors and educationalist developed more comprehensive models. Sternberg's (2002) model could be one of the most comprehensive current models (see, also, Sternberg, 2002: 361). Sternberg's model follows a cyclic and iterative process starting from identifying the problem to evaluating of the problem:

Problem Identification → Definition of the problem → Constructing a strategy → organising information→allocation of resources →Monitoring problem solving→evaluating problem solving→problem identification.

Even in this comprehensive model every step is characterised by a certain degree of critical thinking. Using these two examples the emphasis is on following a certain sequence and it is hoped that once all the steps are followed the solution will be eminent. However, in practice and especially in mathematics this does not happen as often as one would like to. For example, in mathematics when solving simple quadratic equations, a three step algorithm could be developed: (1) Simplify the equation; (2) write the equation in standard form; and, (3) use the quadratic formula and solve the equation. Sounds simple? Most probably it does. Then what percentage of learners solve the

equation (x-3)(x-4) = - 8 accurately? Is the emphasis on performing the three steps or on getting a correct answer, solving the problem accurately? If it is on the performing of the steps (as most of the learners do) problem solving is a process. If it is on solving the problem then 'problem solved' is the product.

Treating problem solving as a product (the outcome) has many implications and in actual fact it is linked to outcomes based education (OBE). Gray (2001) and Giannakopoulos (2012) equate the product to performance (at work place or academically). First the emphasis is not on the 'magic formula' to be used to solve the problem. Giannakopoulos (2012) states that CT is a pre-requisite to knowledge acquisition (KN) as well as application of such knowledge (AP). KN is a prerequisite to AP but not a sufficient condition as AP involves more than content. Depending on the type of AP more cognitive and non-cognitive factors could be involved, as they were identified by literature (e.g., Billing, 2007) such as persistence and willingness to take risks, explicit abstraction, active self-monitoring and arousing mindfulness, among some of the factors. Successful application of knowledge leads to successful solution of the problem and thus acquisition of more knowledge, if problem solving is equated with learning.

Treating problem solving as a process also implies that there are certain necessary steps to be followed in order to reach the desirable goal. It was stated earlier that such method could lead to instrumental learning, rule driven (Skemp, 1977). Here a complex process is erroneously simplified. Any product requires quality assurance and quality control (evaluation). In mathematics, the derived answer has to be checked whether it makes sense or not. In problem solving terms irrespective of the process used, if the problem solver does not arrive at the solution (the product) then it is equivalent to that no process has taken place. Therefore the product is one and only one while different processes can be used. So the product gets priority over the process.

Furthermore it can be argued that treating problem solving as a process requires an inductive approach. By using this approach, "unless the thought processes follow a systematic way, whereby the preceding step is linked to the next step, there could be no end to that process or wrong path is followed" (Giannakopoulos, 2012, p.272). It is a kind of a 'hit or miss' approach which very is prominent in mathematics when students try to solve a problem. In the end it is still necessary to examine the validity of the solution (quality assurance). If the product is well defined then a deductive approach is appropriate as one starts from (the possible solution and works backwards and the various parameters which are connected to the solution are identified (2012, p.272). The problem solver has to approach the problem from a logical way such as 'if this is true then…..' and arrive at the existing knowledge to validate the original assumptions. The emphasis is on solving the problem and not on the process 'how to solve the problem'.

Finally treating problem solving as a product, contrary to previous problem solving models the process begins by gazing at the problem with a critical eye (see, Figure 1, CT→AP). Then using either an inductive or deductive way in a problematic situation the three components involved are: (a) the problem solver; (b) the problematic situation, the obstacle; and, (c) the tools necessary to overcome the obstacle to arrive at the desirable goal.

5. A NEW PROBLEM SOLVING FRAMEWORK FOR MATHEMATICS

Treating problem solving as a process as well as a product necessitates a holistic way in teaching problem solving. The emphasis is not just on the process to be followed to solve a problem (a basic necessity) but also on the problem solver and how can the desired product (problem solved) be attained. The framework is based on the assumption that problem solving ability can be enhanced and not necessarily taught since in a higher institution of learning especially, the learner already possesses certain problem solving abilities. This argument can be traced back in the foundation years

when the child enters formal education. Lipman (2003) and Hart (1981) found that when children start formal schooling they can solve a number of problems. After 3 years of schooling they cannot solve the same problems as formal ways of solving problems have been introduced. It is argued here that if it is true that children do possess inner solving abilities, which is confirmed by Lipman (2003) and Hart (1981), then such abilities should be established and enhanced rather than replacing them with formal processes. This does not imply that formal education should not take place but rather formal education should link children's experiences and existing predominantly tacit knowledge with the formal content. The same problem continues in the transition from arithmetic to algebra and from solving concrete problems to abstract problems.

Accepting that human beings do possess inner problem solving abilities it stands to reason that such abilities should be continuously explored and enhanced rather than ignoring them and teaching problem solving based on assumptions if not perceptions of what the learner knows. This leads to adjusting the teaching method from one of imparting knowledge to establishing the status quo of the learner and enhancing existing cognitive abilities. If not, it could lead to formation of misconceptions which do occur. As the years go by, if misconceptions are not identified at an early stage, especially in mathematics, the learner could lack the necessary foundation to solve more complex problems. What this argument means in short the teacher should concentrate mostly on identifying such misconceptions, building on the existing knowledge base of the learner, enhancing problem solving abilities, understand who the learner is. In other words there should be a shift from teaching to diagnosing. This leads to a teaching-learning framework which is illustrated in Figure 2. The framework consists of three parts.

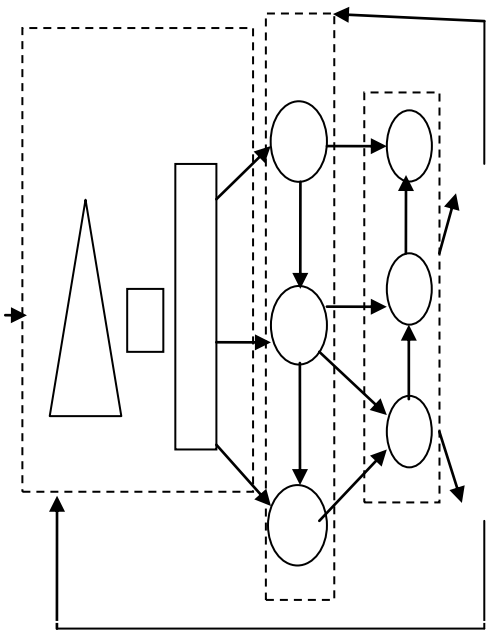

Figure 2: A problem solving framework (adapted from Giannakopoulos, 2012)

In Figure 2, PSC = Problem solver characteristics, K + S = Knowledge and skills, S = Simple, An = Analogical, C = complex, T of P = Type of problem, N of P = Nature of the problem.

From Figure 2, firstly, a good knowledge of the learner by the teacher is necessary. This can be achieved through diagnosis (see, Figure 2.I). In this context diagnosing is equivalent to the medical diagnosis. It is the teacher's duty to empower the learners with sufficient knowledge to solve mathematics related problems. No assumptions can be made.

Making diagnosis is the first step towards developing the problem solving abilities in a learner. Diagnosing according to Solomon (1999) involves making attempts: (1) to know students' (employees) current understandings and misconceptions; (2) to deepen their own subject area knowledge and being able to choose what is worth teaching; and, (3) to assess their own beliefs and practices, selecting, designing, and redesigning appropriate pedagogical strategies (Solomon, 1999). These three points form the foundation of the teaching practice of the teacher. Unless the teacher: establishes the existing knowledge and skills the learner possesses and misconceptions that brings along; becomes himself/ herself a lifelong learner by improving his/ her teaching practices and keep up with current learning theories and pedagogical practices, (s)he might not be able to facilitate the problem solving process.

Giannakopoulos (2012) adds that it is necessary to establish also the existence or non-existence of the various types of knowledge (K + S) as defined Shavelson et al. (2005) namely , procedural, strategic, conceptual, declarative, situated (Figure 2.II). It happens often that when a learner has rich declarative knowledge (information or data) it is mistaken as either conceptual or strategic until they have to apply such knowledge, make use of it when information converts to knowledge.

Once the diagnosis is done, then training the learner to use existing knowledge and procedures takes place. This part is equivalent of using problem solving models. In this phase II (Figure 3), it is necessary to know who the problem solver is by obtaining information with respect to the affective and cognitive levels that he/ she operates especially the types of knowledge the employee possesses. These could be used to predict whether the learner could solve problems in a certain domain of knowledge. Obviously a mathematician cannot be expected to solve problems in chemistry. The final phase III (Figure 2) deals with problem classification and the nature of the problem. With respect to problem classification Green and Gillhooly (2005, pp. 347-366) divided problems into simple, analogical and complex problem. Simple problem solving does not imply that they are easy to solve but that they do not require extensive background knowledge, insight or complex cognitive processes such as analysis and synthesis, making judgments, abstract thinking and so on . As Steiner (2006) puts it, they are often solved through rote thinking.

In analogical problem solving the solver recognizes the similarity between the problem at hand and previously structurally similar (isomorphic) problems even if the knowledge domain differs (Green & Gillhooly, 2005, p.363; Halpern, 1997, p.52). Complex problem solving involves many simple and/ or analogical problems that must be solved in a certain order in an inductive or deductive way depending on the type of problem. These problems require more knowledge and higher order cognitive skills (Green & Gillhooly, 2005, p.365). For Steiner (2016) creative, flexible and often unusual and not (totally) approved treatments that draw on a broad understanding of the system and holistic thinking are prerequisites.

However, when learners are taught problem solving skills it is necessary to make use of theoretical as well as pragmatic problems. Giannakopoulos (2012, p.278) divided the problems to be used into abstract, hypothetical and real. The teacher has to ensure that the learner is exposed to these types of problems if problem solving abilities are to be enhanced. As an example, solving a quadratic or a differential equation could be considered as abstract. Solving the quadratic equation of $t^2 - 3t + 2 = 0$ could be solving a problem depicting a moving object (hypothetical). Solving a problem where a collision took place and the distance the car travelled to stop, could be a real problem. The transition could be one of real→hypothetical→abstract or the reverse. It is like learning to fly an airplane: starting with theory and discussing abstract situations also, simulation and then addressing the real situation. All three components (real; hypothetical; and, abstract) are of equal importance. Solving

abstract problems, like in mathematics enhances the development of high levels cognitive skills such as critical thinking.

Taking a learner through the three phases by having gained knowledge of the learner, that is, his/ her weak and strong points, his/ her gap in knowledge, and so on, satisfies the three theoretical constructs, critical thinking, content knowledge (and types of knowledge) and application as prerequisites to get the product, 'problem solved'. The process I→II→III is iterative.

6. CONCLUSION

Problem solving has been recognised by governments, educationalists, economists and scientists as a way of generating knowledge, improving life, acquiring knowledge and so on, but also improving the cognitive functions of a person as problem solving requires high level of thinking. Mathematics being predominantly an abstract subject from the start forces people to think abstractly, which is an indicator of high thinking levels. As problem solving is its core business, approaching problem solving being a process and a product, cognitive functions like critical thinking are enhanced and this could lead to solving problems of more complex nature.

However, if problem solving is treated as a process only, there is danger in the problem solver to treat it as algorithmic, void of any understanding. This paper showed that if problem solving is treated also as a process it encourages, thinking for a start and it is elevated to higher levels thus able to solve more complex problems. Modeling problem solving as a product and creating a framework based on this it could lead to more learners being able to solve complex problems.

REFERENCES

Azquotes (n.d). "*Mathematics is the abstract key which turns the lock of the physical universe.*" Retrieved from: http://www.azquotes/quotes/600153.

Billing, D. (2007). Teaching for transfer of core/ key skills in higher education: Cognitive skills. *Higher Education*, *53*, 483-516.

Bloom, B.S. (1979). *Taxonomy of educational objectives. Book* 1. New York: McGraw-Hill, inc.

Fisher, A. (2001). *Critical thinking: An introduction*. Cambridge: Cambridge University Press.

CAPS (2011). National curriculum statement. Retrieved from: http://www.education.gov.za.

Giannakopoulos, A. (2012). *How critical thinking, problem-solving and mathematics content knowledge contribute to vocational students' performance at tertiary level: Identifying their journeys*. PhD degree, University of Johannesburg, South Africa.

Giannakopoulos, A. (1991). *The transition from the concrete to the abstract in mathematical thinking*. South Africa: M.Ed. Rand Afrikaans University (UJ).

Gray, P.H. (2001). A problem-solving perspective on knowledge management practices. *Decision Support Systems, 31(1), 87-102.*

Green, A.J.K., & Gillhooly, K. (2005). "Problem solving." In N. Braisby, & A. Gelatly (Eds). *Cognitive Psychology* (pp 347-366). Oxford: Oxford University Press.

Groth, R.E., & Bergner, J.A. (2006). Preservice elementary teachers' conceptual and procedural knowledge of mean, median, and mode. *Mathematical Thinking and Learning, 8*, 37-63.

Halpern, D.F. (1997). *Critical thinking across the curriculum: A brief edition of thought and knowledge.* London: Lawrence Erlbaum associates.

Hart, K.M. (1981). *Children's understanding of mathematics and science. Mathematics team*. London: Murray.

Hyde, A. (2007). Braiding mathematics, language, and thinking. Retrieved from: http://www.synergylearning.org.

Kwon, O.N., Allen, K., & Rasmussen, C. (2005). Students' retention of mathematical knowledge and skills in differential equations. *School Science and Mathematics, 105(5*), 227-240.

Leader, L.F., & Middleton, J. A. (2004). Promoting CT dispositions by using problem solving in middle school mathematics. *Research in Middle Level Education Online, 28(1).*

Lipman, M. (2003). *Thinking in education*. Cambridge Education Press: London

Ben-Chaim, D., & Zoller, U. (2007). Purposely teaching the promotion of higher-order thinking skills: A case of CT. *Research in Science education, 37(1).*

Martinez, M. E. (2006). *What is Metacognition*? Phi Delta Kappan.

McPeck, J.E. (1990). *Teaching critical thinking.* New York: Routlege, Chapman and Hall, Inc.

Papastephanou, M., & Angeli, C. (2007). CT beyond skill. *Educational Philosophy and Theory, 39(6*), 604-621.

Polya, G. (1973). *How I solve it: A new aspect of mathematical method.* New Jersey: Princeton University Press.

Pushkin, D. (2007). Critical thinking and problem solving-the theory behind flexible thinking and skills development. *Journal of Science Education, 8(1),* 13-19.

Rodd, M. (2002). *Hot and abstract: Emotion and learning undergraduate mathematics*. University of Leads.

Schaffler, I. (1999). "Epistemology of education." In R. McCormick, & C. Paechter (Eds). *Learning and knowledge* (pp 1-6). London: Paul Chapman publishing.

Shavelson, R.J., Ruiz-Primo, M. A., & Wiley, E. W. (2005). *Windows into the wind. Higher Education, 49*, 413-430.

Skemp, R.R. (1977). *The psychology of learning mathematics.* London: Routledge and Kegan Paul.

Solomon, M.Z. (1999). *The diagnostic teacher: Constructing new approaches to professional development*. NY: Teachers College Press.

South African Qualifications Authority. (1997). SAQA Bulletin, 1:7.

Steiner, G. (2006). How appropriate are two established concepts from higher education for solving complex real-world problems? A comparison of the Harvard and the ETH case study approach. *International Journal of Sustainability in Higher Education, 7(3),* 322-340.

Sternberg, R.J. (1986). *Teaching critical thinking, part 1: Are we making critical mistakes*? Phi Delta Kappan, 194-198.

Sternberg, R.J. (2002). *Educational psychology*. Boston: Allyn and Bacon.

Walsh, C.M., & Seldomridge, L.A. (2006). Critical thinking: Back to square one. *Journal of Nursing Education, 5(6), 212-221*.

Zevenbergen, R. (2001). "Changing contexts in tertiary mathematics: implications for diversity and equity." In D. Holton (Ed), *The teaching and learning of mathematics at university level: An ICMI study* (pp. 13-26) Netherlands: Kluwer Academic Publishers.